FERMILAB-CONF-10-179-E

Testing the Dark Energy Camera on a Telescope Simulator

H. Thomas Diehl[a1], Timothy M. C. Abbott[b], Jim Bailey[c], Marco Bonati[b], Gale Bremer[b], Jorge Briones[b], Elizabeth J. Buckley-Geer[a], Herman Cease[a], Edward C. Chi[a], Darren L. Depoy[d], Juan Estrada[a], David Finley[a], Brenna Flaugher[a], David Gerdes[e], Jim Grudzinski[c], Bill Hanson[f], Jiangang Hao[a], Klaus Honscheid[g], Cheryl Jackson[a], Inga Karliner[f], Kurt Krempetz[a], Kyler W. Kuehn[c], Stephen E. Kuhlmann[c], Jim Morgan[c], Brian Nord[e], Terri Shaw[a], Greg Tarle[e], Kenneth Schultz[a], Adam Sypniewski[e], Andy Stefanik[a], Jon Thaler[f], Alistair Walker[b], William Wester[a], Curtis Weaverdyck[e], Robert J. Woods[a], Allen Zhao[c]

[a]Fermi National Accelerator Laboratory, PO Box 500, Batavia, IL, USA 60510;
[b]Casilla 603, AURA/Cerro Tololo Inter-American Observatory, La Serena, Chile;
[c]Physics Dept., Argonne National Laboratory, 9700 S. Cass Ave., Argonne, IL 60439;
[d]Dept. of Physics, Texas A&M University, 4242 TAMU, College Station, TX USA 77843-4242;
[e]Physics Dept., University of Michigan, 450 Church St., Ann Arbor, MI, 48109-1040;
[f]Dept. of Physics, University of Illinois, 1110 W. Green St., Urbana, IL 61801-3080;
[g]Dept. of Physics, The Ohio State University, 191 West Woodruff Ave., Columbus, OH 43210

FOR THE DARK ENERGY SURVEY COLLABORATION

ABSTRACT

The Dark Energy Camera is a new prime-focus instrument to be delivered to the Blanco 4-meter telescope at the Cerro Tololo Inter-American Observatory (CTIO) in 2011. Construction is in-progress at this time at Fermilab. In order to verify that the camera meets technical specifications for the Dark Energy Survey and to reduce the time required to commission the instrument while it is on the telescope, we are constructing a "Telescope Simulator" and performing full system testing prior to shipping to CTIO. This presentation will describe the Telescope Simulator and how we use it to verify some of the technical specifications.

Keywords: Dark Energy, Dark Energy Camera, Blanco, CTIO

1. INTRODUCTION

The Dark Energy Survey [1-2] (DES) will measure dark energy parameters using four complementary techniques: weak gravitational lensing, galaxy cluster counting, baryon acoustic oscillations, and type 1a supernovae. The data will be collected during a 5000 square degree survey of the southern galactic cap and a smaller repeated supernovae survey during 525 nights of observing from 2011 to 2016. The survey requires a new instrument, the Dark Energy Camera (DECam), to be installed in the prime focus of the 4-meter Blanco telescope at Cerro Tololo Inter-American Observatory (CTIO) in Chile.

The DECam [3] will have a 3 square-degree field of view accomplished using a new optical corrector with one of the largest lenses ever produced for optical astrophysics, and an 8-filter housing [4] that will contain SDSS g,r,i,z, and Y filters provided by Asahi, Intl. The working diameter of the filters is 620 mm. The two-blade shutter, built by Bonn University, has a 600 mm circular aperture [3]. The imager [5] is a 520 Mpixel digital camera comprised of sixty-two 2048 x 4096 CCDs [6-9]. An additiona1 twelve 2048 x 2048 CCDs will be used for guide and focus applications [10]. These CCDs are cooled to -100C using a two-phase flow LN2 cryogenic system [11] in a closed-loop mode. The CCD

[1]Diehl@FNAL.GOV; phone 1-630-840-2934.

readout is performed using a system [12-13] based on the National Optical Astronomy Observatory (NOAO) Monsoon electronics. All of this is controlled by online software called "SISPI", which stands for Survey Image System /Process Integration (SISPI) [14-15]. Figure 1 shows a cartoon of all of the camera elements at Prime Focus, with the exception of the cage covers. In addition to the references provided above, there are several other presentations [16-18] in this conference.

In addition to the camera itself, the DECam Project is supplying infrastructure and equipment required for operations in the Blanco Dome. This includes a new secondary mirror (f/8) installation/removal platform that preserves the ability to use instruments at the Cassegrain Focus, including NEWFIRM [19], a DECam Imager mount/dismount fixture to be operated on the telescope's northwest platform, and a filter installation/removal platform.

Most of the camera assembly, testing, and integration is being performed at Fermilab, site of most of the Project's engineering and technical manpower. For this purpose the Project has constructed a "Telescope Simulator". Also, this platform will allow us to develop the procedures that will be used to install the instrument on the telescope. Performing this work at Fermilab, we reduce the risk of extended telescope down-time when we install the instrument on the telescope, and we minimize the amount time required for integration and commissioning at CTIO. This paper describes the Telescope Simulator (sometimes simply TS) and how it works. We present examples of the technical specifications [20-22] for DECam and how they can be verified using the instrument in the TS, including those related to the various component handling platforms. We provide the up-to-date status of the camera including the expected timeline for shipping the camera to Chile.

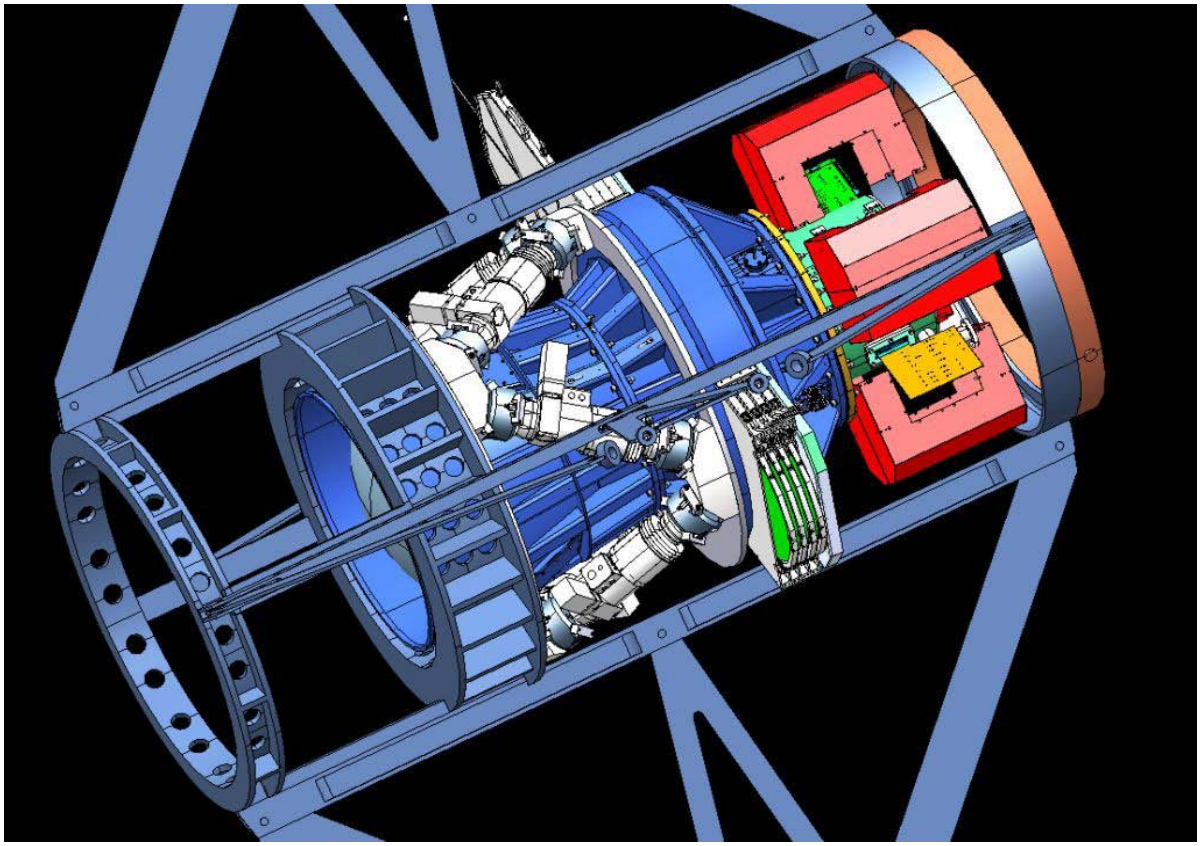

Figure 1 The Dark Energy Camera. The cartoon shows (approximately left to right) the fins and support cage (blue-grey), the hexapod actuators (white), the corrector barrel (blue), the filter-changer, the shutter, the imager Dewar (green), and the readout electronics crates (red). The length is roughly 11 feet and the mass roughly 16,500 lbs. The first optical element, which is pointed at the telescope's 4m mirror, is barely visible in the end of the barrel on the left.

2. TELESCOPE SIMULATOR

2.1 Design of Telescope Simulator

The Telescope Simulator is a large steel structure that has a copy [23] of the Blanco's inner and upper rings and the "fins" or "spider" that connect the camera to those rings. Figure 2 shows a photograph of the Blanco at CTIO and detail of the upper structure, including the present prime focus cage. Of course, we don't have a whole telescope with a 4-meter mirror at Fermilab. Nor do we have the Serrurier Truss, which supports the inner and upper rings at the top of the telescope. Instead, the camera, fins, and rings are supported by a frame that provides pitch and roil capability to orient that equipment as if it was at the top of a telescope. Though the machine has the capability to move, it doesn't mimic the slewing or guiding capability of the telescope.

Figure 2 The Blanco Telescope. LHS shows the telescope, which is a polar mount. RHS shows the upper structure of the telescope. The present prime focus cage (black) can be seen, as well as the fins (black) and inner and upper rings (white) attached to the Serrurier truss (also white). The telescope is tipped-over to the NW platform (yellow). That platform allows access to the prime focus instrument.

Figure 3 shows a cartoon of the Telescope Simulator with the Dark Energy Camera suspended as it will be on the Blanco and as-if the telescope was positioned at the NW platform. The TS Base is 14' tall and 25' wide. The four rings weigh 32,000 pounds. The outer one has a 24' diameter. Two motors from SEW Eurodrive can orient the camera to any angle within the pitch and roll degrees of freedom. The pitch motor is 1/3 HP, 1800 RPM, directly-coupled, torque-limited and geared down 35,009:1 for a maximum speed of 20 minutes per revolution. The roll motor is ½ HP, 1800 RPM, geared down 709:1 for a maximum speed of 11.5 minutes per revolution. The coupling is by means of a 62' chain attached to the inner race (3rd ring out). Of course, the motor controls allow the assembly to be moved more slowly. When the assembly is not moving the motors automatically engage brakes. The motors are controlled from a panel located on the exterior of the base. These controls are simple power on/off, with forward/backward and speed control for each ring. Four limit switches prevent the rings from being oriented in any undesired location.

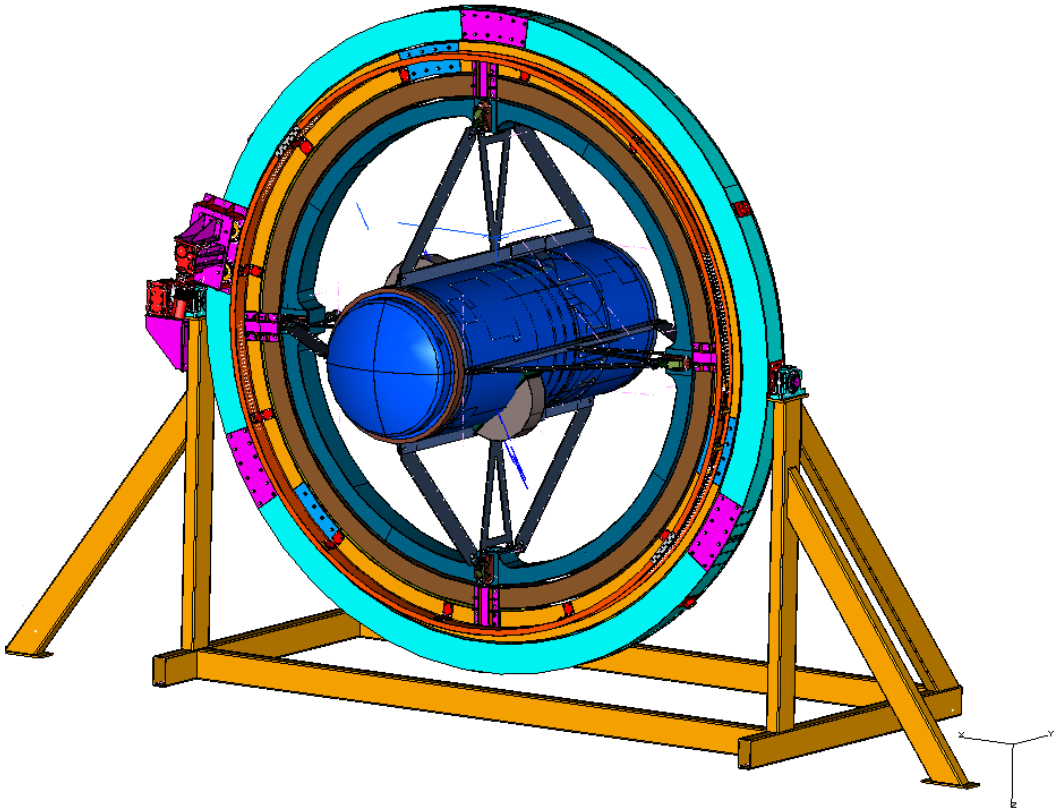

Figure 3 The Telescope Simulator with the Dark Energy Camera suspended by the "fins". Outward from there are the "inner ring" (blue) and the "upper ring" (brown). The 3rd ring out, "the inner race" (orange) is connected to the drive motor (pink) mounted on the "outer race" (blue). That motor performs the roll orientation of the camera. The outer race has axles mounted on bearing blocks on the top of the support base (yellow). Another motor, mounted on the post on the LHS of the base, performs the pitch orientation of the camera. There inner ring has two axles that, when vertical, allow the camera to be oriented to the f/8 handling platform and the filter changer platform. The orientation of the telescope simulator and camera shown in the cartoon is equivalent to the telescope leaned over to the NW platform in the Blanco dome.

3. TESTS OF DECAM TECHNICAL SPECIFICATIONS

3.1 DECam Technical Requirements Tests

The science objectives [24] of Dark Energy Survey feed down to 116 technical requirements [21] that DECam must meet. There are several categories of requirements: general, optical, detector (CCD), guide & focus, mechanical, and instrument software. A subset of these can be tested in advance of the final installation on the telescope. Among the general requirements is that all instrument components shall perform to specification when the telescope is in any orientation. This requirement is the reason that the TS must have pitch and roll motion capability. We will test all systems in 9 orientations. We will perform all tests, at 4 roll orientations, with imager pointed 30 and 60 deg below the horizon. We repeat the tests with the imager pointing down. Rather than describe how we test all 116 individual requirements, we describe some in general and a few in more detail.

We will not test the corrector optics on the TS for several reasons, including reducing the risk of damage. The optical elements will be installed in their cells and aligned in the corrector barrel at University College, London and then shipped directly to the telescope. We will use a copy of the corrector barrel and dummy weights instead of the optics for the tests on the TS. While on the TS, the Dewar window will be an optical flat of the same diameter as the final corrector element that we will use while on the Blanco.

3.1.1 Imager Cooling Tests

The focal plane detectors (CCDs) operate at -100 C. A cryogenic closed-loop system circulates two-phase nitrogen (LN2) and the regenerates the liquid using a pair of chillers. Independent of the imager orientation the detectors must have operating temperature stable to 0.25K over a 12 hour period. The detector focal plane spatial temperature variation will be $\leq$ 10 degrees K across the focal plane. These two specifications ensure that the quantum efficiency of the CCDs is stable over time. Control of the temperature is maintained by heaters coupled to the back of the focal plane. On the Blanco, the LN2 is piped from the sidewalk adjacent to the telescope, through the polar axis and declination axis wraps, and then up to the prime focus. We will use the same cooling system while we operate the imager on the TS. Because we don't have quite the same geometry, we'll run the cooling lines by an expedient and safe path, and drape the slack on the floor adjacent to the base. Temperature monitoring is performed using RTD's on the CCDs and also at the control points coupled to the back of the focal plane.

3.1.2 CCD Readout Tests

At this point in time we have sufficient CCDs that have passed all technical requirements for use in the focal plane and have been performing systems integration using engineering grade CCDs in a full-sized prototype imager, which we call the "Multi-CCD Test Vessel" (MCCDTV). We have also been using the MCCDTV as a platform for developing tests for the final imager. We have developed a flat-field projector, which produces uniform illumination of the focal plane and will enable us to generate a photon transfer curve, which provides measurement of the CCDs gain, linearity, and readout noise. We have also developed a movable "star projector" [16], which produces a uniform grid of small spots on a subset of the focal plane. This will allow measurement of CCD and electronic cross-talk and focal plane mechanical vibration. It will also provide a cross-check of the focal plane flatness measurement [5].

3.1.3 Tests of the Movable Components (Hexapod, Shutter, and Filter-Changer)

The Hexapod connects the barrel, including the imager, filter-changer, shutter, readout electronics, and optics to the cage. It keeps the camera aligned with the mirror and performs the focus motions. We will test the hexapod under full load to determine that the focus, lateral, and tilt motions are performed as expected, including speed, over the full range of motion. Note that DECam reads out in 17 seconds, and motions must be performed while the readout is occurring. The position of the imager with respect to the cage may be tested using several methods, including optical survey, stick-mike, and analysis of the spot-size from the "star projector" as measured by the imager's CCDs.

The Filter-changer-mechanism (FCM) inserts the filters, which are fastened into individual cells, into the optical beam. The filters are moved by compressed air. The FCM must be able to fully-position the filters within 10 seconds of the requested change. Sometimes the motions are gravity neutral. But, of course, sometimes the filters must be pushed up into place, or gently lowered into place, and the cells are usually at some tilted orientation, as well. These motions have been tested in the U. of Michigan, and we will verify them on the TS. Incidentally, these are the largest filters made for visible light telescope, with clear aperture of 620 mm.

Similarly, the shutter, which is also the largest of its kind at 600 mm aperture, will be tested to verify the precision and accuracy of its timing characteristics in all 9 orientations. Again, this provides a verification of the stand-alone test results.

3.1.4 Prime Focus Cage and Corrector Barrel Tests

The DECam support cage must be electrically isolated from the rest of the telescope. This is accomplished by using a G10/FR4 electrical isolation bushing at the joint between the cage and the fins. We need to demonstrate that the bushing is robust through the cage installation process and that isolation is maintained after installation. In addition, the imager must be electrically isolated from the corrector barrel to ensure low-noise readout of the CCDs.

In order to avoid heat plumes above the telescope, which will degrade the seeing, we need to ensure that no surface of the cage is more than 3 degrees C above ambient. Substantial effort has gone into the design and implementation of cooling systems that remove heat from the instrument. We will operate DECam as if it's on the telescope and look for and mitigate hot spots. This test will be performed with an array of thermocouples and perhaps an infrared camera.

3.1.5 Simulated Observing

Simulated observing will allow us to integrate and commission the instrument control software, which is called "SISPI". We will gain experience using the instrument control interfaces at the level of the normal "user" and also the level of

"expert diagnostics". We will test that the mosaic-image diagnostic and display tools for speed and "usability". And we will also tune up the monitoring of "alarms and limits" and all associated databases. We can produce simulated data and test the data management tools, as well.

3.1.6 Imager Mount/Dismount Testing

The DECam imager must be removable for periodic service at CTIO. Removal and installation will be done at the present northwest (NW) platform station, as is shown in Fig. 2. We have built a copy of the top of the NW platform called the "NW Platform N". It can be seen in the foreground of Fig. 4 and the RHS of Fig. 5. The imager (not shown in either) will be attached to the "hexagonal" stand by an adjustable adapter ring. That stand is attached to a cart that rides on steel ways and is driven in-or-out and side-to-side by hand-cranked ball screws. In the back of the ways is a screw-jack that allows the pitch angle of the Ways to be adjusted from 0 deg (level), which eases the installation by crane of the imager onto the Ways, to 8 deg for imager installation onto the end barrel, which is mounted in the cage and at the angle of the telescope top-end.

There are a few differences between the NW platform N and the NW platform at CTIO. Notably, the use of hand-cranks and a screw jack to adjust the imager position and angle, and instead of using motorized lifts on columns, as in done at the telescope and shown in Fig. 4, we will support the NW platform N on concrete blocks and shims to set the rough elevation while on the TS. Because of the need for the 8 deg pitch angle adjustability, we expect to bring our copy of the Ways and the hexagonal stand, along with all of our imager handling equipment, to CTIO.

We will first test all the functionality and repeatability of this equipment on the Telescope Simulator.

Incidentally, it is a curiosity that during an observing visit to Kitt Peak, some of us found the original f/8 handling system outdoors, underneath some trees, on the RHS of the road just down the hill towards the solar observatory. As it was in decent condition, we had that shipped to Fermilab. It is now reused as the "hexagonal" stand for the DECam imager mount/dismount hardware.

3.2 DES Community Needs Tests

DECam will be a facility instrument at NOAO, and must serve the NOAO user community in their pursuit of a wide variety of scientific investigations. The user community will be able use the telescope. They may choose to use DECam in either the same types of observing preferred by Dark Energy Survey or some variant, such as use of a non-DES filter or even non-sidereal or dithered observations. They may choose to use a Cassegrain focus instrument such as NEWFIRM, which requires the f/8 secondary mirror to be placed over the front of the DECam corrector. There are 34 Community Needs [22] for the instrument and data-formatting and 43 for the data management system. Rather than describing them all, we concentrate on those that we will test using TS.

3.2.1 f/8 Handling

The DECam Project will provide an f/8 handling system that allows the f/8 mirror to be installed or removed in a minimum of a couple hours. The f/8 mirror is irreplaceable, so any handling must occur in a positively safe manner. In DECam, the f/8 secondary is mounted on the corrector-side of the prime focus cage (i.e. not positioned by the DECam hexapod); tip-tilt and focus are adjusted through controls provided by CTIO as in the present f/8 mount. However, we must be able to position the f/8 mirror on the prime focus cage within 300 microns in each of directions perpendicular to the optical axis of the telescope, with the vertex of the secondary mirror 7493.8 mm from the vertex of the primary mirror at about the center of the 38 mm travel of the secondary mirror position, and with the rear reference surface of the f/8 cell orthogonal to the axis of the cage within 0.5 arc-min. Thus, the f/8 points at the center of the 4m mirror within the adjustability of the f/8 cell.

CTIO is using the f/8 cell on the Blanco during TS testing. At this time and until DECam arrives, the f/8 is normally stored on the back end of the corrector and the inner ring is "flipped" 180 deg to locate the f/8 mirror in its operating position. The total bundle of DECam cables and cooling is too thick to allow a full 180 deg flip motion. Instead, the DECam Project has constructed a platform, called the "f/8 handling platform", which will be used to install and remove the f/8 from the end of the optical corrector. The platform is a motorized, adjustable frame that can line up the f/8 cell with the end of the cage and then slowly maneuver the cell onto guide pins. Its operation is shown in the background of Fig. 4. Note that the inner ring must be rotated 120 deg on its axis so that the (normally) lower end of the optical corrector is pointed away from the mirror and at the hardware on the handling platform. When the f/8 is not in use, it

will be stored on the platform, protected, and covered. The f/8 handing system has been constructed and is at present being sent to Fermilab for testing on the TS. A photograph is show in Fig. 5. We will verify its operation and test the repeatability of the location of a dummy f/8 cell using the new platform with the cage mounted on the TS.

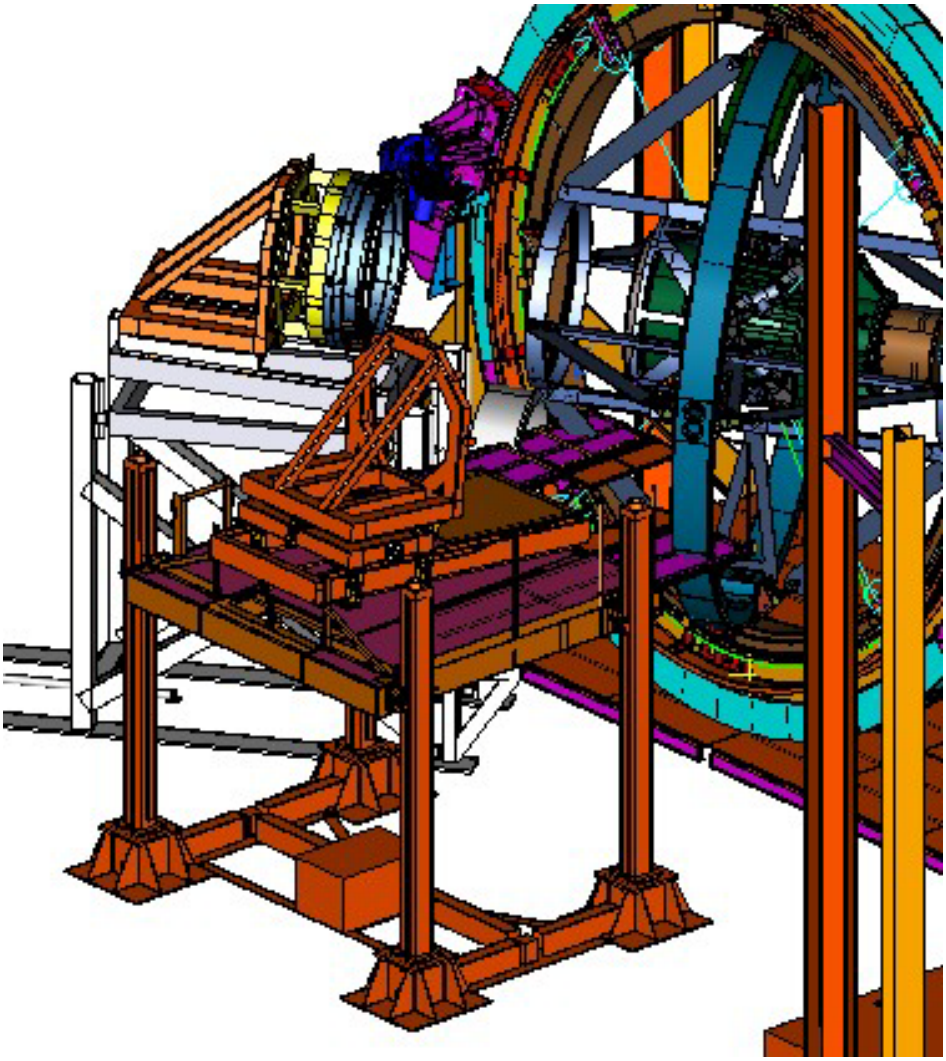

Figure 4 The Telescope Simulator with the Dark Energy Camera suspended by the "fins". The camera has been rotated by 125 deg on axles on the inner ring (dark blue) so that the corrector faces the f/8 handling platform, which is in the back on the left. The imager handling system (mostly orange) is in the foreground, where the "Hexagon" rides on the "Ways" (at an angle). The long, straight poles on the RHS are part of the building's crane support and so are extraneous to this description.

3.2.3 Filter Handling Platform

The DECam filter changer will hold up to eight 60cm aperture filters in slots. Normally, five of those slots are used by DES, with three slots remaining available for community use. The DECam Project will supply a filter handling system that allows two or fewer people to change out filters safely within two hours, with one hour as a goal. The same platform will be used to install the mechanism that switches between filters during imaging and also the shutter. This platform is under design at this time. It will be tested later this year on the TS. At CTIO it will be operated with the telescope pointed northward.

Figure 5 On the LHS is the f/8 handling system under construction at Argonne National Labs. This system has a "Hexagonal" stand of its own. On the RHS are pieces of the imager handling system in a middle stage of construction at Fermilab. One can easily identify the Ways (unpainted) with the large hand wheel at the back, the cart with the small hand wheel, and the hexagonal stand, cleaned up and newly painted yellow that we found at Kitt Peak.

Figure 6 The Telescope Simulator as of May 30th in location at Lab A at Fermilab. The inner and outer rings are painted white. The inner and outer races are painted yellow. The TS base is light blue. The motors are on the LHS. These have been successfully used to orient the assembly. Next step: attach the fins and prime focus cage.

4. PRESENT STATUS OF THE TELESCOPE SIMULATOR AND THE CAMERA

The Telescope Simulator construction is complete. Figure 6 shows the machine in its location in Lab A at Fermilab. As of this date (May 31, 2010) the fins and cage are in-hand but not yet mounted to the inner ring. The f/8 handling system has been shipped from Argonne National Lab to Fermilab but it is not yet installed in Lab A. Construction of the imager handling system is nearly complete at Fermilab but it will not be moved into Lab A until after f/8 handling system testing is complete.

Meanwhile, the corrector barrel with dummy weights instead of the actual optics is due to arrive in Lab A in a few weeks. The imager construction is complete and initial shakedown and cooling testing will start next week. We expect to begin testing the imager on the TS starting in about August 2010. We expect to finish by the end of this year.

DECam will be shipped to Chile in stages, with most of the camera arriving at CTIO in early 2011. The imager, with all of the CCDs, will be the last component shipped, arriving in late-Spring 2011. We expect to start commissioning Dark Energy Camera on the Blanco Telescope in October 2011. At that time the Telescope Simulator may be available for other similar use.

ACKNOWLEDGEMENTS

Funding for the DES Projects has been provided by the U.S. Department of Energy, the U.S. National Science Foundation, the Ministry of Science and Education of Spain, the Science and Technology Facilities Council of the United Kingdom, the Higher Education Funding Council for England, the National Center for Supercomputing Applications at the University of Illinois at Urbana-Champaign, the Kavli Institute of Cosmological Physics at the University of Chicago, Financiadora de Estudos e Projetos, Fundação Carlos Chagas Filho de Amparo à Pesquisa do Estado do Rio de Janeiro, Conselho Nacional de Desenvolvimento Científico e Tecnológico and the Ministério da Ciência e Tecnologia, the German Research Foundation sponsored cluster of excellence "Origin and Structure of the Universe" and the Collaborating Institutions in the Dark Energy Survey.

The Collaborating Institutions are Argonne National Laboratories, the University of California at Santa Cruz, the University of Cambridge, Centro de Investigaciones Energeticas, Medioambientales y Tecnologicas-Madrid, the University of Chicago, University College London, DES-Brazil, Fermilab, the University of Edinburgh, the University of Illinois at Urbana-Champaign, the Institut de Ciencies de l'Espai (IEEC/CSIC), the Institut de Fisica d'Altes Energies, the Lawrence Berkeley National Laboratory, the Ludwig-Maximilians Universität, the University of Michigan, the National Optical Astronomy Observatory, the University of Nottingham, the Ohio State University, the University of Pennsylvania, the University of Portsmouth, SLAC, Stanford University, and the University of Sussex.

REFERENCES

[1] T. Abbott et al., "The Dark Energy Survey", astro-ph/0510346.
[2] B. Flaugher, "The Dark Energy Survey", Int. J. Modern. Phys. A20, 3121 (2005).
[3] Brenna Flaugher et al., "Status of the Dark Energy Survey camera (DECam) Project", Proc. SPIE 7735-12, these proceedings.
[4] Greg Tarle, "Large format filter changer mechanism and shutter for the Dark Energy Survey", Proc. SPIE 7739-162, this conference.
[5] Greg Derylo et al., "Assembly of the Dark Energy Survey CCD Imager", Proc. SPIE 7739-163, this conference.
[6] N. A. Roe at al., "Radiation-tolerant, red-sensitive CCDs for dark energy investigations", Nucl. Inst. and Meth. in Phys. Res. A572, 526 (2007).
[7] H. Thomas Diehl et al., "Characterization of the DECam Focal Plane Detectors", Proc. SPIE 7021-08 (2008).
[8] Donna Kubik et al., "Automated Characterization of CCD Testing for DECam", Proc. SPIE 7735-311, these proceedings.
[9] Juan Estrada et al., "Focal plane detectors for the Dark Energy Survey", Proc. SPIE 7735-61, these proceedings.
[10] Aaron Roodman, "Focus and alignment using out-of-focus stellar images at the Dark Energy Survey", Proc. SPIE 7735-136, these proceedings.

[11] Herman Cease et al., "Cooling the dark energy camera CCD array using a closed-loop two-phase liquid nitrogen system", Proc. SPIE 7739-164, this conference.
[12] Terri Shaw et al., "System architecture of the Dark Energy Survey camera readout system", Proc. SPIE 7735-123, these proceedings.
[13] Javier Castilla et al., "Readout electronics for DECam", Proc. SPIE 7735-311, these proceedings.
[14] Klaus Honscheid, "The DECam data acquisition and control system", Proc. SPIE 7740-57, this conference.
[15] Jacob Eiting, "HTML 5, Websockets, and Sproutcore: a web-based user interface for the Dark Energy Camera (DECam)", Proc. SPIE 7740-39, this conference.
[16] Jiangang Hao et al., "Measuring the flatness of focal plane for very large mosaic CCD camera", Proc. SPIE 7735-137, these proceedings.
[17] Rafe H. Schindler and Peter M. Lewis, "Design and initial performance of a radiometric all-sky infrared camera (RASICAM) for DES/CTIO", Proc. SPIE 7735-119, these proceedings.
[18] Jean-Phillpe Rheault et al., "Spectrophotometric calibration system for DECam", Proc. SPIE 7735-226, these proceedings.
[19] http://www.noao.edu/ets/newfirm/
[20] Tom Diehl et al., "DECam Technical Design Report", located at http://des-docdb.fnal.gov:8080/cgi-bin/ShowDocument?docid=1350 (2008). Available on request.
[21] Tim Abbott et al., "Dark Energy Camera Specifications and Technical Requirements", located at http://des-docdb.fnal.gov:8080/cgi-bin/ShowDocument?docid=806 (2009). Available on request.
[22] R. C. Smith, A. R. Walker, and T. M. C. Abbott, "Community Needs for the Dark Energy Camera and Data Management System", http://des-docdb.fnal.gov:8080/cgi-bin/ShowDocument?docid=1354, available on request, and http://www.noao.edu/dir/usercom/2007/DECam-Community-Use.pdf.
[23] The original design drawings are available online by request from KPNO.
[24] James Annis et al., "The Dark Energy Survey Science Requirements Document", located at http://des-docdb.fnal.gov:8080/cgi-bin/ShowDocument?docid=20. Available on request.