FERMILAB-PUB-09-188-AD

MODELING THE LLRF CONTROL OF A MULTI-CAVITY RF STATION FOR PROJECT-X*

J. Branlard†, B. Chase, FNAL, Batavia, IL 60510, USA

Abstract

Fermilab's High Intensity Neutrino Source (HINS), the proposed 325 MHz low energy section of Project X [1, 2] consists of an RFQ, 16 copper cavities and 31 superconducting spoke resonator cavities, all driven by a single 2.5 MW klystron. Each cavity has a high power vector modulator which provides individual RF power control. This paper proposes a scheme that optimizes RF drive and vector modulator control, minimizing the burden on the high power vector modulator during the RF pulse.

MODEL PURPOSE AND DESCRIPTION

All simulation work in this paper is devoted to systems in which a single source is used to provide RF power to multiple cavities. Such architecture is justified by cost savings resulting from using a single klystron. High power ferrite vector modulators (FVM) have been developped [6] and are used to control the RF amplitude and phase for each cavity. Several simulation models have been implemented to investigate different operation issues related to controlling many cavities with a single klystron for lepton machines [3, 4, 5]; the work presented here takes the problem further and considers the case of normal conducting cavities with individual synchronous phase angles and models the RF control using FVM for hadron accelerators. The normal conducting section of the HINS accelerator,

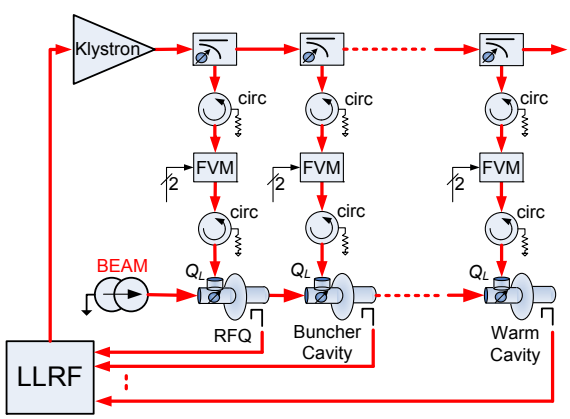

Figure 1: RF control block diagram for HINS.

sketched in Fig. 1, consists of a 2.5 MW klsytron, a radio frequency quadripole (RFQ), 2 buncher cavities and 16 single cell copper cavities. Each cavity has a FVM to perform dynamic (i.e. during the RF pulse) amplitude and phase modulation of the RF forward power. These devices have been tested and a steady state characterization is presented in this work and verified against experimental data. Two circulators are placed on either side of the FVM's and the klystron power is distributed through power couplers. In the final HINS design, variable power couplers will be installed, allowing for both amplitude and phase tuning.

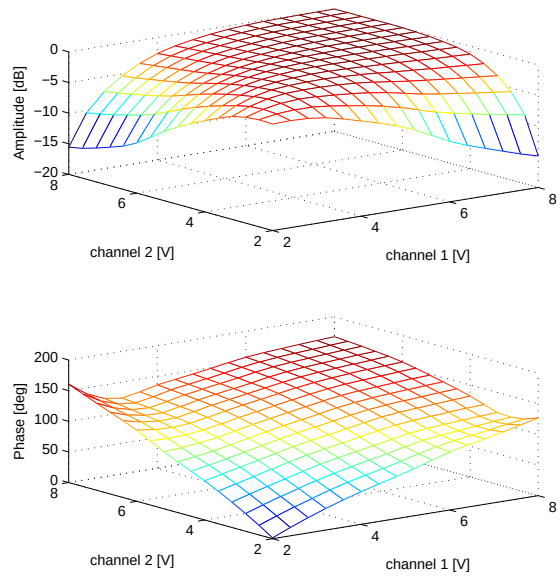

Figure 2: Amplitude and phase modulation with the FVMs.

Cavity Model

The cavity model is the standard parallel RLC equivalent circuit [7], resulting in a first order differential equation. The parameters that are cavity specific are the operating gradient V_{cav}, the accelerating phase angle Φ_S, the loaded Q_L, the waveguide power coupling into each cavity P_k and the cavity detuning angle Ψ. At the gradients of interest (below 1 MV/m), Lorrentz force detunning is not an issue and is not simulated. The DC beam current is assumed to I_b=25 mA and the RF frequency f_0=325 MHz.

Ferrite Vector Modulator

The FVM is based on a 4-port hybrid coupler: RF in (port 1), RF out (port 2) while port 3 and 4 are each connected to a ferrite phase shifter. Two voltage controlled 300V, 300A current sources magnetically bias the ferrite. The dynamic range of the two control lines is 0 to 10 V

* work supported by Fermi Research Alliance, LLC under Contract No. DE-AC02-07CH11359 with the United States Department of Energy
† branlard@fnal.gov

but the actual operational range is 2 to 8 V, (because of the ferrite gyromagnetic resonance below 2 V and saturation of the solenoids above 8V). The transfer function of the FVM modulation domain (i.e. amplitude and phase of the RF modulation vector as a function of control input), was measured over a grid of control voltages. A 2D cubic spline interpolation was performed over the range of measured data and is shown in Fig. 2. To fully linearize the control of the FVM, the inverse function of the data shown in Fig. 2 is needed. A look-up table for each of the control line has been generated for an amplitude and phase tuning range of -2 to -8 dB and 40 to 110 degrees. These values coincide with the published tuning range of the FVM [6]. A linear interpolation scheme is used to obtain amplitude and phase requests falling between look-up table entries.

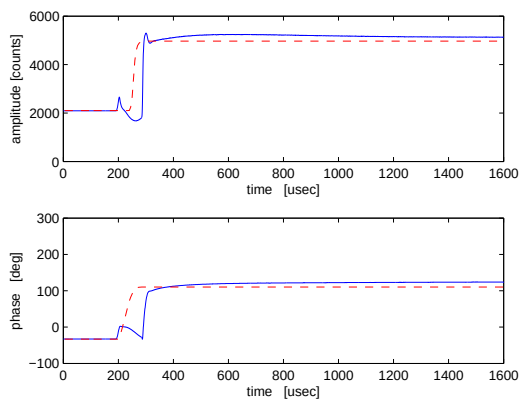

Figure 3: Amplitude and phase response of the FVM to a 3dB attenuation request.

In the frequency domain, the FVM and solenoid drive amplifiers are modeled with two first order low pass filters and a phase shift slew rate limitation. The first low pass filter has a bandwidth of 40 kHz and corresponds to the output filter placed on the switching supply of the FVM; the slew rate limitation accounts for the loading of the ferrites and is measured to be $6°/\mu$s. The second low pass filter corresponds to the ferrite bandwidth and has a 35 kHz cut-off frequency [6]. Figure 3 shows the time domain response of the FVM to a -3dB attenuation request (solid line) and the model predictions (dashed lines). The amplitude jumps occuring during the first 200 μs correspond to the ferrites going through ferromagnetic resonnance. One can also observe that the ferrites take several hundreds of μs to reach steady state. This suggest that a controller with a transient compensation scheme is needed for dynamic FVM operation.

RF CONTROL

Beam Compensation using the FVM

In this approach, the klystron forward power is a square pulse and the FVMs serve two purposes: a steady-state amplitude adjustment to bring the cavity gradient to its setpoint and a dynamic tuning to compensate for beam loading effects. By setting the FVM steady state prior to the RF pulse, the parasitic transients related to the gyromagnetic resonnance do not affect the cavity gradient. However, when the beam is on, due to the bandwidth limitations of the FVM and its slow settling time, compensating for beam loading in the $\pm 1\%$ range can take up to 100 μs. By ramping up the beam over 50 μs and applying beam loading compensation before the beam arrival time, field control to $\pm 1\%$ in amplitude and $\pm 1°$can be achieved with feed forward (FF) only. This is illustrated in Fig. 4, where the impact of ramping up the beam current is shown. The FVM feed forward table and the beam current are shown to indicate the FF timing.

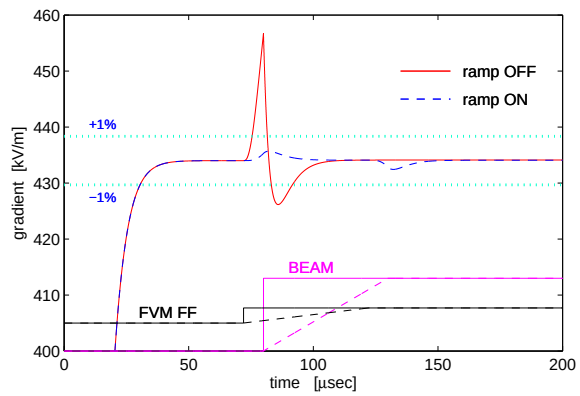

Figure 4: Beam compensation with FVM transient response for HINS cavity no. 6.

Beam Compensation using Klystron FF

As explained in [8] for the case of one klystron per cavity, adjusting the forward power amplitude and phase at the beam arrival time to compensate for beam loading effects is equivalent to maintaining a constant net current in phase space (i.e. generator + beam current). This results in zero reflected power during steady state and the cavity is said to be matched. In the current HINS design (one klystron for many cavities), modulating the klystron forward power can only match one cavity and typically does not meet other cavities beam-matched conditions. The idea presented in this paper is a three step process.

1. The klystron amplitude and phase are modulated during the beam time so as to fully compensate the beam loading for one cavity. The klystron forward power is scaled by a factor A and the phase is shifted by a phase Φ during beam.

2. To compensate for the error introduced by the klystron modulation, FVMs are used to modulate the forward power for the unmatched cavities by an amplitude ratio α and a phase shift Ψ, prior to the RF pulse to stay away from transients. These settings are not changed

during the RF pulse, with or without beam, and are given below:

$$\alpha = \frac{Ib}{I_k} \frac{1}{\sqrt{1 + A^2 - 2A\cos\Phi}} \quad (1)$$

$$\Psi = \Phi_S + \Phi + \cos^{-1}\left(\frac{A - \cos\Phi}{\sqrt{1 + A^2 - 2A\cos\Phi}}\right) \quad (2)$$

where I_k is the klystron current as seen by the FVM and is proportional to the square root of the klystron forward power.

3. The cavity coupling Q_L and detuning Δf are calculated using Eq. 3 and Eq. 4. They are set once and not changed during the RF pulse.

$$Q_L = \frac{2V_{cav}}{I_b R/Q} \times \frac{\sqrt{1 + A^2 - 2A\cos\Phi}}{\cos\Psi} \quad (3)$$

$$\Delta f = \frac{f_0}{2Q_L} \tan\Psi \quad (4)$$

The tuning parameters for the first 6 cavities of HINS are shown in Table 1. The cavity gradient V_{cav}, unloaded Q_0 and synchronous phase angle Φ_S are taken from [9]. In this implementation, the klystron amplitude and phase modulation during beam loading is calculated so that cavity number 3 is matched. Also shown in the table are the individual forward and reflected power. As expected, the matched cavity (3 in this implementation) has no reflected power. For the complete warm section of HINS (16 normal conducting cavities), the total forward power with this scheme is 555 kW and the total reflected power below 26 kW for a DC beam current I_b=25 mA. A time dependent simulation is used to check the tuning parameters, Fig. 5. Before the RF pulse, the FVMs are set to adjust the klystron RF power to each cavity according to Eq. 1 and 2 while the cavities are tuned according to Eq. 3 and 4. Cavities are filled to their steady state, 50μs before the beam arrives. At this time, the klystron forward power is modulated: the amplitude is scaled by A=1.2 and the phase is shifted by Φ=8.1 deg. In this approach, the settings on the FVM do not need to be changed during the beam time but the beam loading is compensated for all cavities.

Table 1: Parameters for HINS warm cavities 1-6

Cav.	Vcav [kV/m]	Φ_S [deg]	Δf [kHz]	Q_L	P_{fwd} [kW]	P_{ref} [kW]
1	180.7	-90	-28.8	2523	6.8	3.62
2	257.3	-50	13.3	3480	10.4	0.01
3	278.8	-50	12.1	3826	11.6	0.00
4	324.4	-50	10.1	4583	14.9	0.13
5	375.7	-50	12.3	3772	14.9	0.04
6	434.2	-45	14.8	4201	18.9	0.17

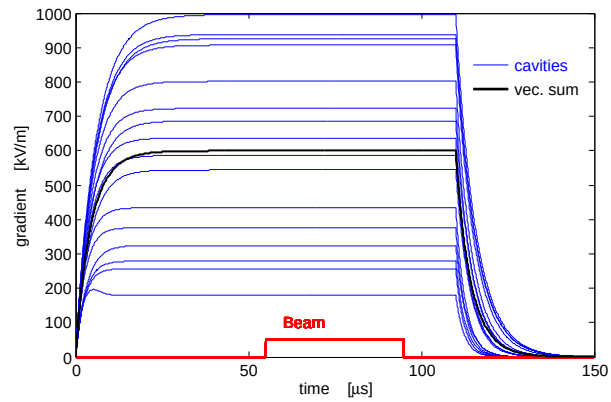

Figure 5: Beam compensation with klystron FF and FVM.

CONCLUSION

Preliminary measurements with the FVM indicate that amplitude and phase control of the RF power for individual cavity in a single klystron/multi cavity accelerator design is possible. A model based on measured data has been developped to simulate cavity control with these devices. A tuning scheme was presented to optimize the available bandwidth of the klystron while alleviating the bandwidth constrains on the FVM. Future work includes developping algorithms for feed back control of the FVM, coupled with the klystron RF drive.

REFERENCES

[1] Fermilab High Intensity Neutrino Source (HINS) program `http://tdweb.fnal.gov/HINS/`.

[2] `http://projectx.fnal.gov/`.

[3] K.L.F. Bane, C. Adolphsen, C. Nantista, "RF Distribution Optimization in the Main Linacs of the ILC", PAC07, Albuquerque, NM, USA, 2007, WEPMS037.

[4] J. Branlard, B. Chase, "Optimal Coupler and Power Settings for Superconductive Linear Accelerators", LINAC'08, Victoria, BC, Canada, Sept. 2008, THP113.

[5] G.I. Cancelo and A. Vignoni, "Optimizing Cavity Gradients in Pulsed Linacs Using the Cavity Transient Response", LINAC'08, Victoria, BC, Canada, Sept. 2008, THP115.

[6] R.L. Madrak and D. Wildman, "High Power 325 MHz vector modulators for the Fermilab High Intensity Neutrino Source (HINS)", LINAC'08, Victoria, BC, Canada, Sept. 2008, THP088.

[7] H. Padamsee, J. Knobloch and T. hays, "RF superconductivity for accelerators", Wiley and sons, inc.

[8] P.B. Wilson, "High Energy Electron Linacs: Applications to Storage RF Systems and Linear Colliders", SLAC-PUB-2884, Nov. 1991

[9] V. Aseev, P. Ostroumov and G. Romanov, "Power consumption in RT CH section", FNAL DocDB no. 2916-v2, Nov. 2007