PROGRESS ON THE MUCOOL AND MICE COUPLING COILS*

L. Wang, X. K. Liu, F. Y. Xu, A. B. Chen, H. Pan, H. Wu, X. L. Guo, and S. X. Zheng,
ICST, HIT, Harbin 1500001, China
D. Summers, University of Mississippi, University MS 38677, USA
M. A. Green, D. Li, S. P. Virostek, and M. S. Zisman, LBNL, Berkeley CA 94720, USA

Abstract

The superconducting coupling solenoid for MuCool and MICE will have an inside radius of 750 mm, and a coil length of 285 mm. The coupling magnet will have a self-inductance of 592 H. When operated at it maximum design current of 210 A (the highest momentum operation of MICE), the magnet stored energy will be about 13 MJ. These magnets will be kept cold using two pulse tube coolers that deliver 1.5 W at 4.2 K and 55 W at 60 K. This report describes the progress on the MuCool and MICE coupling magnet design and engineering. The progress on the fabrication and testing of the two test coils for the coupling coil project is also discussed.

INTRODUCTION

The muon ionization cooling experiment (MICE) will be a demonstration of muon cooling in a configuration that may be useful for a neutrino factory [1]. Stage 6 of MICE (the final MICE channel) consists of: 1) Two spectrometer modules are used for analyzing emittance before and after cooling. 2) Three absorber focus coil (AFC) modules are used for muon ionization cooling within an absorber in the magnetic field generated by the focusing magnet. 3) Two RF coupling coil (RFCC) modules are used for reaccelerating the muon beam between the three cooling stages.

The RFCC modules consist of a superconducting coupling solenoid, which surrounds 1.4-meter diameter vacuum chamber that contains four separately powered conventional copper RF cavities that have a resonate frequency of 201.25 MHz. The individual RF cavity irises are bounded by thin beryllium windows [2]. The coupling magnet will produce a large enough magnetic field to keep the beam within the iris of the RF cavities.

MuCool is an experiment where the 201.25 MHz cavities for MICE can be tested in a magnetic field under conditions like those encountered in the MICE cooling channel. The RF cavity for MuCool is almost identical to the MICE cavities. The coupling coil for MuCool generates a magnetic field within the cavity that is similar to the magnetic field that would be in a MICE cavity. MuCool and MICE will test the gradients that can be achieve in cavities in strong magnetic fields [3] As a result, the design of the MuCool coupling coil and its cryostat is identical to the MICE coupling magnets.

* This work is supported by funds of the cryogenic and technology innovation project under the "985-2" plan of the Harbin Institute of Technology. This work is also supported by the Office of Science, United States Department of Energy under DOE contract DE-AC02-05CH11231 and by the US National Science Foundation through NSF-MRI-0722656.

This paper discusses the changes in the magnet design of the coupling solenoid that is around the RF cavities of both MICE and MuCool. This paper also discusses the progress made on the ICST test coils [4].

THE REVISED MAGNET DESIGN

The MICE coupling coil is a single 285 mm long solenoid wound on a 6061-T6-Al mandrel. The inner coil radius is 750 mm and its thickness is 102.5 mm at room temperature. Table 1 shows the basic parameters of the MICE and MuCool coupling magnet. A standard MRI magnet conductor with a critical current about 760 A at 4.2 K and 5 T. is used for the coupling coil. The insulated conductor dimensions are 1.0 mm by 1.65 mm. Using this conductor, the magnet operating margin is expected to be ~0.8 K when the peak field point is ~7.4 T on the coil at its full design current of 210 A while operating at a temperature of 4.2 K [5]. The magnet is shown in Fig.1.

Table 1: Coupling Magnet Specifications

Parameter	Flip	Non-flip
Coil Length (mm)	285	
Coil Inner Radius (mm)	750	
Coil Thickness (mm)	102.5	
Number of Layers	96	
No. Turns per Layer	166	
Magnet Self Inductance (H)*	591.8	
Magnet J (A mm^{-2})*	114.6	108.1
Magnet Current (A)*	210.1	198.2
Magnet Stored Energy (MJ)*	13.1	11.6
Peak Induction in Coil (T)*	~7.4	~7.0
Coil Temperature Margin (K)*	~0.8	~1.1

* The worst-case design is based on p = 240 MeV/c and β = 420 mm.

The design of the coil has not been changed. The coil cover has been made thicker so that the cooling tubes can be built into the cover plate (See Fig. 2). Having the cooling tubes recessed into the cover plate improves the heat transfer from the coil to the liquid He tubes. The improved cover plate heat transfer reduces the stress in the cover plate to mandrel welds caused by differential thermal contraction as the magnet is cooled down. The thicker cover plate allows the reaction forces in the cold mass supports to be carried across the coil cover through the clevis fixture.

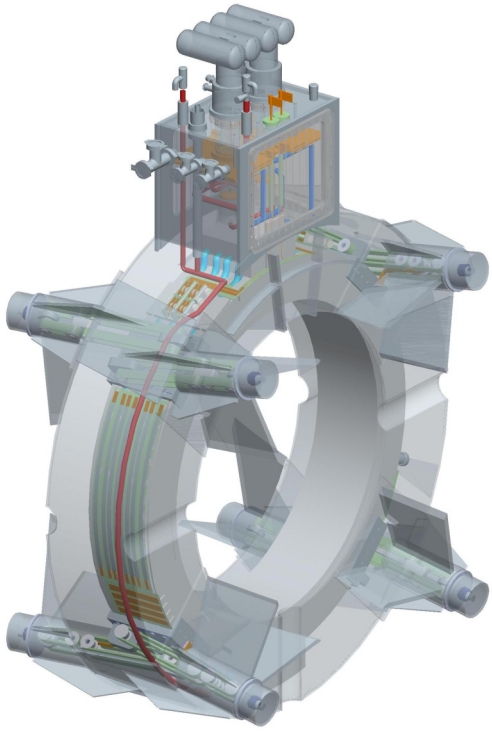

Figure 1: A 3D view of the coupling magnet assembly.

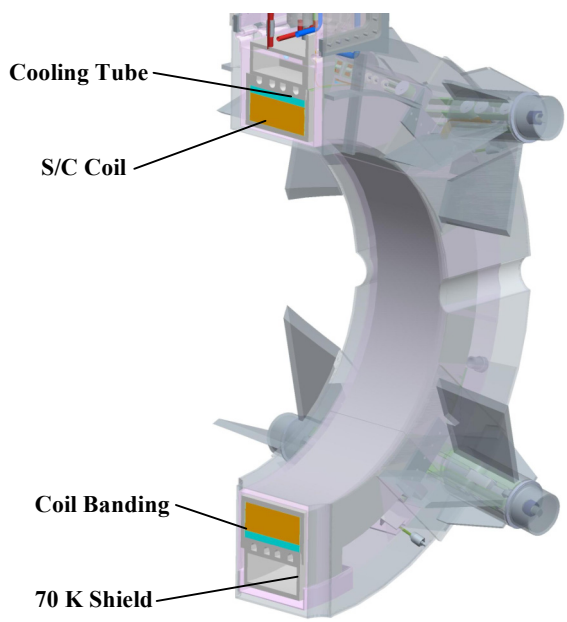

Figure 2: A 3D view of the cold mass assembly showing a cross-section of the coil assembly.

The coupling magnet vacuum vessel is shown in Fig. 3. There are two changes made in the vacuum vessel and the supports that connect the cold mass and 60 K shield to the vacuum vessel. The changes made to the vacuum vessel design will reduce the vessel stress deflection. The new cold-mass support (shown in Fig. 4) is a double band support similar to that used in the spectrometer magnets. The double band system has lower stresses in the bands and the metallic structural elements [6].

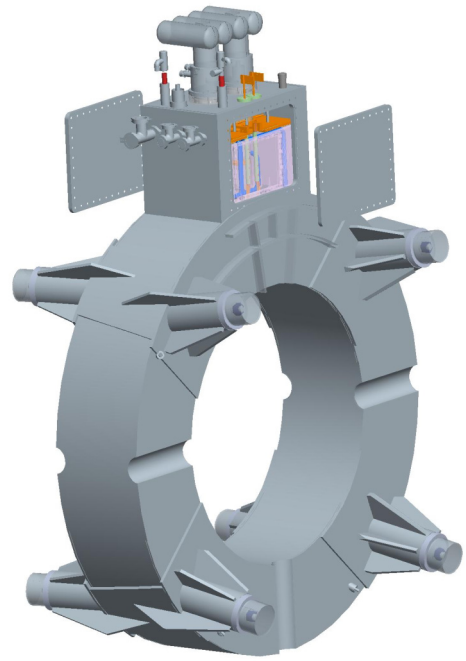

Figure 3: A 3D view of the magnet vacuum vessel.

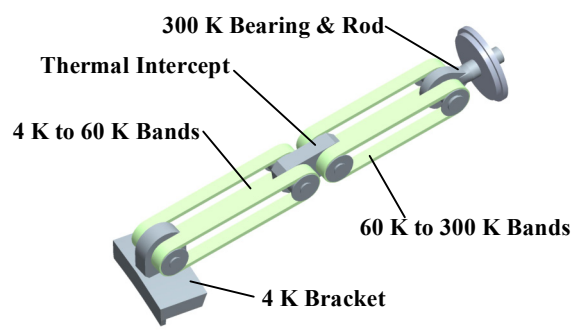

Figure 4: A coupling magnet cold mass support.

The MICE coupling magnet coil shown in Fig. 2 is indirectly cooled using a pair of 1.5 W (at 4.2 K) pulse tube coolers. The connection to the coil is made through the liquid helium flowing in the four tubes in the coil cover plate by using the thermo-siphon principle [7]. The 70 K magnet shield and the conduction copper leads are cooled by the cooler first stage, which is at 60 K.

PROGRESS ON THE ICST TEST COILS

Two test coils have been wound at ICST. The small test coil has an ID of 350 mm and a length of 285 mm [8]. The small coil was wound to develop and debug the ICST winding machine and its tension device. The ICST tension device produces constant tension during winding, unwinding and while the machine is idle. Since the coupling coils will be wet wound with Sycast, the tension can be maintained without the tension device once the filled epoxy has been cured. The first coil was used to train the people that would be winding the coupling coils.

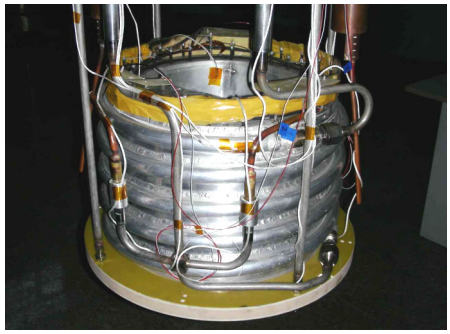

Figure 5: The small ICST test coil cold mass.

The small test coil shown in Figure 5 has been insulated and has been installed in its vacuum chamber. The test of this magnet will occur after the large test coil has been tested at ICST. The first test coil will be used to test the quench protection diodes [9] in magnetic fields over a range from 0 to 4 T at 300 K, 77 K, and 4 K.

The large test coil has an ID of 1500 mm (the same as the coupling coil) and length of 72 mm (about one quarter of the length of the coupling coils) [8]. Figure 6 shows the large test coil being wound on the ICST winding machine. Figure 7 shows the large test coil ready to be installed in its cryostat vacuum vessel.

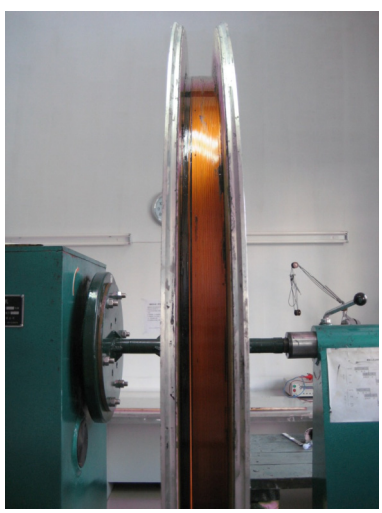

Figure 6: Winding the large test coil.

Figure 7: Installation of the large coil in its cryostat.

The large coil has been installed in its cryostat. The Linde refrigeration system has been debugged. It is expected that the large coil system will be cooled down during the early part of May 2009. The large coil test will be completed by the end of May 2009.

After the large coil test has been finished. The small test coil will be cooled down and powered so that it can be used to provide a 4 T magnetic field for doing the magnetic field tests on the quench protection diodes with the field perpendicular and parallel to the diode junction.

CONCLUDING COMMENTS

The design of the coupling coil has been completed. As soon as the large coil has been successfully tested, the MuCool coupling coil fabrication can be started. The small test coil will be tested after the large coil has been successfully tested. The small coil will be used to conduct a number of tests on various magnet components.

REFERENCES

[1] G. Gregoire, G. Ryckewaert, L. Chevalier, et al, "MICE and International Muon Ionization Cooling Experiment Technical Reference Document," http://hep04.phys.itt.edu/cooldemo.

[2] D., Li, M. A. Green, S. P. Virostek, M. S. Zisman, "Progress on the RF Coupling Module for the MICE Channel," *Proceedings of 2005 Particle Accelerator Conference* Knoxville TN, p 2869, 2005

[3] R. B. Palmer, et al, "RF Breakdown with External Magnetic Fields in 201 and 805 MHz Cavities," Phys. Rev. ST Accel. Beams 12, 031002 (2009)

[4] L. Wang, H. Pan, F.Y. Xu, H. Wu, et al, "Design and Construction of Test Coils for the MICE Coupling Magnet," to be published *IEEE Transactions on Applied Superconductivity* **19**, No. 3 (2009).

[5] L. Wang, F. Y. Xu, H. Wu, et al, "Magnetic and Cryogenic Design of the MICE Coupling Solenoid Magnet System," to be published *IEEE Transactions on Applied Superconductivity* **19**, No. 3 (2009)

[6] H. Wu, L. Wang, X. K. Liu, et al, "A Single-band Cold Mass Support System for MICE Superconducting Coupling Magnet," *Proceedings of ICCR2008* Shanghai in China, p 351 2008.

[7] L. Wang, H. Wu, L. K. li, et al, "Helium Cooling System and Cold Mass Support System for the MICE Coupling Solenoid," *IEEE Transactions on Applied Superconductivity* **18**, No. 2, p 941, (2008).

[8] L. Wang, H. Pan, F. Y. Xu, et al, "Design and Construction of Test Coils for the MICE Coupling Magnet," to be published in *IEEE Transactions on Applied Superconductivity* **19**, No. 3. (2009).

[9] X. L. Guo, F.Y. Xu, L. Wang, et al, "Quench Protection for the MICE Cooling Channel Coupling Magnet," to be published in *IEEE Transactions on Applied Superconductivity* **19**, No. 3. (2009).