FERMILAB-CONF-08-139-AD-APC

PROGRESS WITH THE DIGITAL TUNE MONITOR AT THE TEVATRON*

V. Kamerdzhiev#, V. Lebedev, A. Semenov, FNAL, Batavia, IL 60510, USA

Abstract

Monitoring the betatron tunes of individual proton and antiproton bunches is crucial to understanding and mitigating the beam-beam effects in the Tevatron collider. To obtain a snapshot of the evolving bunch-by-bunch tune distribution a simultaneous treatment of all the bunches is needed. The digital tune monitor (DTM) was designed to fulfill these requirements. It uses the standard BPM plates as a pickup. The vertical proton monitor is installed and allows us to gain valuable operational experience. A major upgrade is underway to implement an automatic bunch-by-bunch gain and offset adjustment to maintain the highest possible sensitivity under real operational conditions. We present the concept of the DTM along with its technical realization as well as the latest experimental results. Major challenges from the design and operation point of view are discussed.

INTRODUCTION

In the TEVATRON 36 proton bunches collide with 36 anti-proton bunches at the center of mass energy of 1.96 TeV. The bunches of each species are arranged in 3 trains of 12 bunches circulating around the ring with the revolution frequency f_{rev} = 47.7 kHz. The bunch spacing within a train is 396 ns corresponding to 21 RF buckets (53.1 MHz). The bunch trains are separated by 2.6 μs abort gaps corresponding to 139 RF buckets. The betatron tunes of individual bunches are affected, among other phenomena, by the head on and long range beam-beam interaction [1]. These mechanisms limit the performance of modern colliders. In order to be able to mitigate the beam-beam effects, the knowledge of the bunch-by-bunch tune distribution is crucial. Three transverse tune monitors are presently available at the Tevatron: the 21.4 MHz Schottky, the 1.7 GHz Schottky and the Direct Diode Detection Base Band Tune (3D-BBQ) detector [2]. The 21.4 MHz Schottky is used to measure the horizontal and vertical tunes of the 36 proton bunches without the possibility of gating on individual bunches. The 1.7 GHz Schottky is capable of measuring the horizontal and vertical tunes of a single proton and anti-proton bunch but needs a few minutes of averaging time to get the precision of 10^{-4}. Furthermore, the significant width of the betatron sidebands at high frequency and the presence of transverse coupling in the machine result in additional uncertainty of the reported tune values. The 3D-BBQ detector is under development and allows to gate on proton and anti-proton bunches. This monitor showed promising results (individual proton and anti-proton tunes have been observed without additional beam excitation) and is presently used to cross-check the tunes measured by the two other monitors. The Digital Tune Monitor (DTM) [3], the subject of this paper, has the potential to report the horizontal and vertical tunes of each proton and anti-proton bunch, at a repetition rate of 1 Hz.

*Work supported by the U.S. Department of Energy under contract No. DE-AC02-07CH11359

#vsevolod@fnal.gov

EXPERIENCE WITH THE DTM

The DTM was successfully used to acquire proton vertical spectra in numerous HEP stores [4]. The theoretical estimates show that detecting the betatron oscillation of individual bunches without additional beam excitation might be possible. However, under real operating conditions the ultimate achievable sensitivity and the dynamic range are limited by the orbit drifts (Fig.1), low frequency beam motion (Fig.2) and the bunch to bunch intensity and position variation.

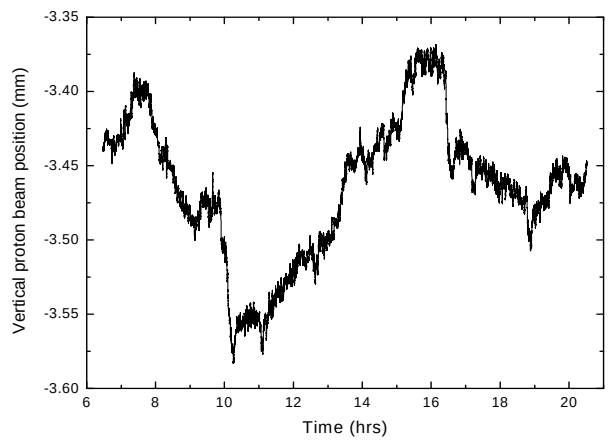

Figure 1. Vertical proton beam position reported by the Tevatron BPM over the course of a store.

The present DTM design makes use of a linear discriminator in a feedback loop in the difference channel. This technique allows for compensation of the slow beam motion (based on the average position measured over several turns).

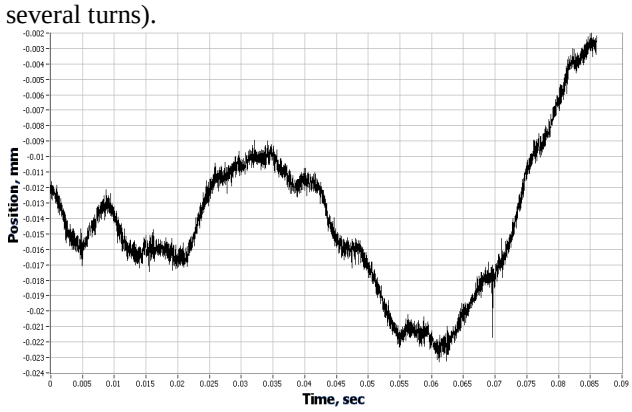

Figure 2. An example of the vertical proton beam position as seen by the DTM. Full scale is 22 μm, ~4000 turns.

The application of this method led to reproducible results but additional beam excitation is still necessary.

The position resolution of the DTM in the FFT averaging mode was estimated to be of the order of 100 nm. The frequency resolution is better than 12 Hz.

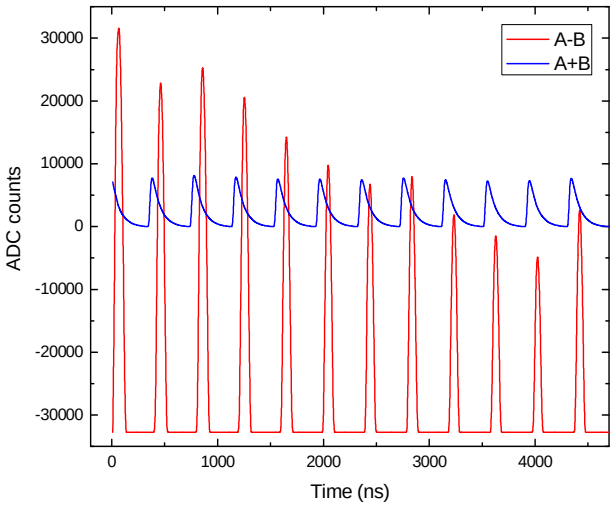

Figure 3. The integrated sum and difference signals in time domain (ADC FIFO) measured 3.5 hrs into store # 6051. Proton bunches 1-12 are shown.

As mentioned above the bunch to bunch variation in intensity and position significantly limits the dynamic range and the achievable sensitivity. Fig.3 shows a snapshot (content of the ADC FIFO) of the A-B and A+B signals. The data represents a single passage of the beam by the pickup. The vertical scale corresponds to the full ADC range. The gain in the A+B channel is much lower than in the A-B channel. One can see that in this particular case the bunch to bunch amplitude variation, caused by the long range beam-beam effects and the different bunch intensities, consumes more than half of the available ADC range in the A-B channel. In extreme cases it can be the full range. Furthermore, beam motion can cause temporary saturation for some bunches leading to elevated noise floor in the spectra or even to data loss.

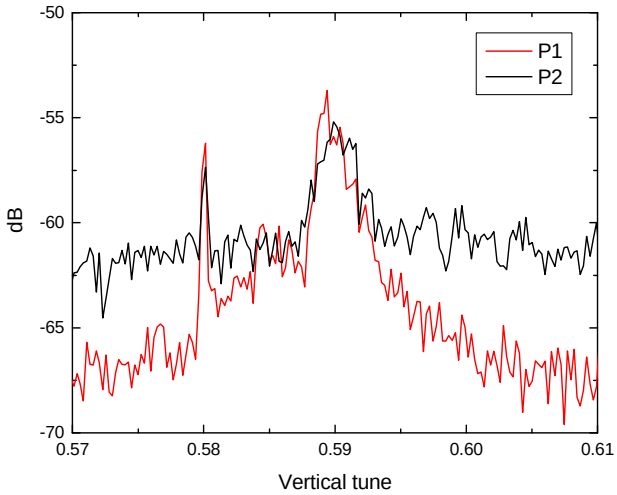

Figure 4. The vertical DTM spectra for proton bunches 1 and 2 measured 3.5 hrs into store # 6051.

An example of the vertical proton spectra acquired with the DTM is shown in Fig.4. The noise floor in the P2 spectrum is about 5 dB higher than in P1 spectrum – a sign of possible dynamic range problems. The data was taken during a HEP store using additional beam excitation (band limited noise). Since the excitation power is very low and is needed for less than 2 s the DTM does not affect the Tevatron operation in any way.

In order to provide adequate beam excitation the DTM now includes a subsystem consisting of a two channel digital signal generator and two power amplifiers (PA). Since the betatron sideband of interest corresponds to 19.6 kHz, inexpensive commercially available audio PAs are used. Fig.5 shows how the kicker and pickup are shared with other Tevatron systems.

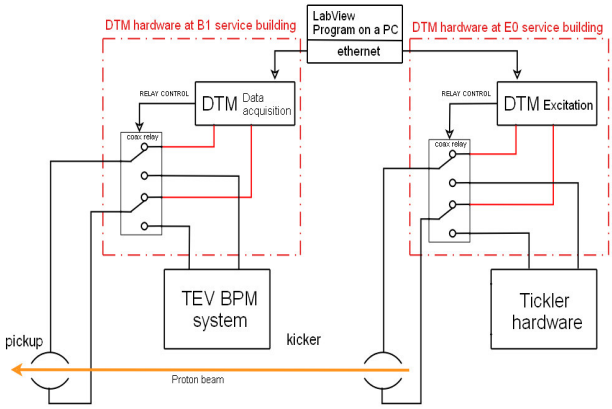

Figure 5. A block diagram illustrating the pickup and kicker sharing.

THE NEW DEVELOPMENT

In order to cope with the issues described in the previous section the DTM is undergoing a major upgrade. Based on the operational experience we acquired, several additional techniques are being currently implemented. Fig.6 shows the block diagram of the latest design. In order to be able to effectively suppress the beam position offset at the pickup location the signals from individual plates are now integrated, amplified and digitized separately. In addition, a fast linear discriminator (LD) and a variable gain amplifier (VGA), both controlled by the FPGA by means of two fast DACs are used for compensating the bunch to bunch amplitude variation. All the signal processing, including four parallel FFT engines and a DSP is realized in the large CYCLONE III FPGA. The DSP takes care of the data formatting and communication via 100/1000Mbit Ethernet link. The LD threshold is calculated using the orbit data (all bunches over several revolution periods) and the data describing the properties of each individual bunch. Before each tune measurement, the DTM goes through a “learning period” (several turns) when the data tables describing the individual bunches are derived. During the actual data taking these tables are used to adjust the LD and the VGA for predictable bunch parameters. Additional adjustment can be made on the turn-by-turn basis.

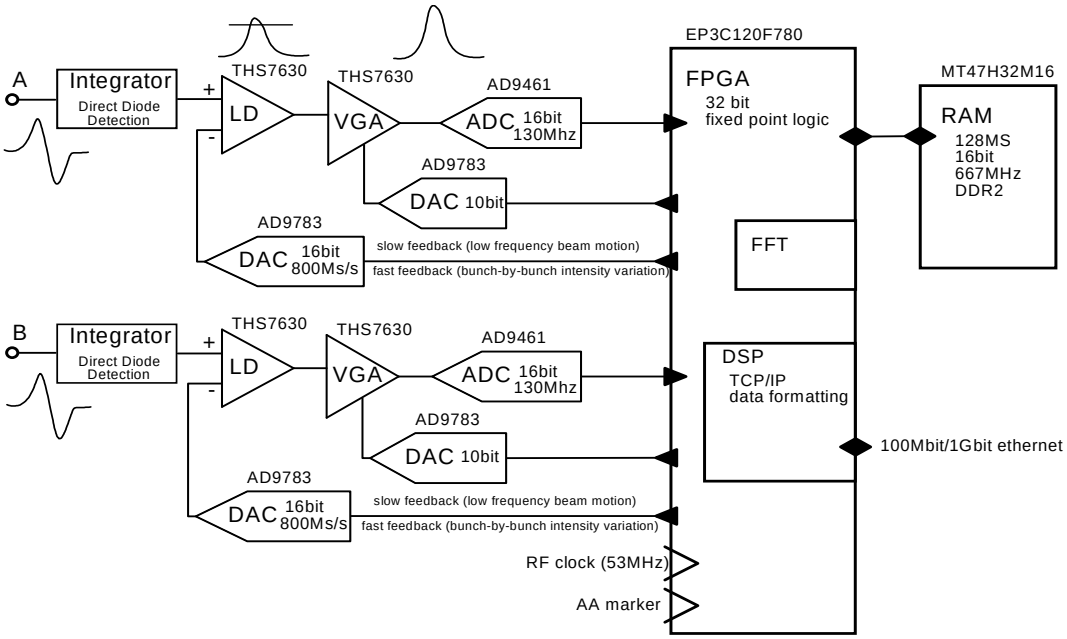

Figure 6. The block diagram of the new DTM design.

SUMMARY

Based on the experience gained while operating the Digital Tune Monitor in numerous HEP stores, several additional features are now being added to the DTM design. The new hardware has been assembled; the FPGA code development is underway. The new design will allow compensating for the detrimental affects of the orbit changes and bunch to bunch intensity and position variation. These measures are expected to result in significant improvement of sensitivity and reliability of the DTM.

ACKNOWLEDGEMENT

We would like to thank J.-P. Carneiro, B. Fellenz, V. Scarpine, J. Simmons, V. Shiltsev, and R. Webber for their contibutions to the project.

REFERENCES

[1] V. Shiltsev *et al.*, “Beam-beam effects in the Tevatron”, Phys. Rev. ST Accel. Beams 8, 101001 (2005).

[2] M. Gasior and R. Jones, “The Principle and First Results of Betatron Tune Measurement by Direct Diode Detection”, LHC Project Report 853, August 2005. See also “High Sensitivity Tune Measurement by Direct Diode Detection”, Proceedings of DIPAC 2005, same authors.

[3] J.-P. Carneiro *et al.* “A possible new method to measure the betatron tunes at the TEVATRON ”, FNAL Beam-doc-1911, August 2005.

[4] A. Semenov *et al.* “Status of the FNAL Digital Tune Monitor”, Proceedings of PAC 2007.