FERMILAB-CONF-07-781-AD

Status of the ATF Damping Ring BPM Upgrade Project

C. Briegel[1], N. Eddy[1], B. Haynes[1], J. May[2], D. McCormick[2], J. Nelson[2], D. Nicklaus[1], P. Prieto[1], R. Rechenmacher[1], T.Smith[2], N. Teranuma[3], J. Urakawa[3], D. Voy[1], M. Wendt[1], M. Woodley[2]

1- Fermi National Accelerator Laboratory
P. O. Box 500, Batavia, IL 60510-0500 - U.S.A.

2- Stanford Linear Accelerator Center
2575 Sand Hill Road, Menlo Park, CA 94025 - U.S.A.

3- KEK High Energy Accelerator Research Organization
1-1 Oho, Tsukuba, Ibaraki 305-0801 - Japan

A substantial upgrade of the beam position monitors (BPM) at the ATF (Accelerator Test Facility) damping ring is currently in progress. Implementing digital read-out signal processing techniques in line with an optimized, low-noise analog downconverter, a resolution well below 1 mum could be demonstrated at 20 (of 96) upgraded BPM stations. The narrowband, high resolution BPM mode permits investigation of all types of non-linearities, imperfections and other obstacles in the machine which may limit the very low target aimed vertical beam emittance of < 2 pm. The technical status of the project, first beam measurements and an outlook to it's finalization are presented.

1 Introduction

An important goal of the ILC beam studies at the KEK ATF damping ring is to generate and extract a beam with low vertical emittance (< 2 pm). This requires various optimization methods to steer the beam along an optimum (golden) orbit with minimum disturbance to non-linear field effects. A high resolution BPM system is a mandatory tool to achieve this goal, requiring a resolution in the 100 nm range operating in a "narrowband" mode. Many related beam studies will be triggered with this high resolution BPM tool, e. g. damping process and minimization of the damping time, beam based alignment (BBA) studies, including offset drift investigations, analysis/correction of various unwanted effects (coupling, chromaticity, noise, etc.). A wideband, turn-by-turn mode of moderate resolution (< 10 μm) also has to be provided for injection/extraction, and some special beam studies. The BPM's may also be used within a orbit feedback system at a later stage. The ATF DR BPM Upgrade Project is a KEK/SLAC/Fermilab collaboration that addresses the problem by installing new hard-, firm- and software for read-out and signal processing of the 96 installed button-type BPM pickups in the ATF damping storage ring:

- 714 MHz-to-15 MHz donwmix- and calibration-module, located inside the ATF tunnel.
- VME-based digital signal processing and timing electronics, based on the commercial *Echotek* digital receiver.
- Various FPGA-firmware, diagnostics software, and an EPICS interface to the ATF control system.

2 The ATF Damping Ring

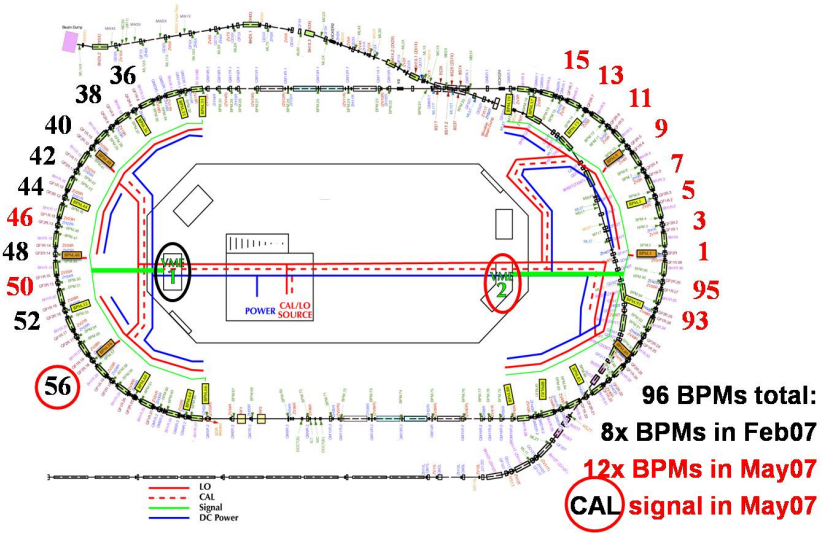

Figure 1: Layout of the ATF damping ring

Fig. 1 shows the layout of the approximately 140 m circumference ATF damping ring located at KEK, Japan, as of May 2007. It utilizes injection from a S-Band linac and extraction to the dump beam-line at the same location in the upper straight section, at a beam energy of 1.28 GeV; the 714 MHz RF cavities are located at the lower straight section. As indicated, 20 out of 96 button-style BPM's are upgraded with the new read-out system, which is located in the tunnel (distributed analog donwconverters) and in two air-conditioned huts outside the tunnel (VME 1 and VME 2) accommodating the VME crates.

beam energy E	$=$	1.28 GeV
beam intensity, single bunch	$\approx$	1.6 nC $\equiv 10^{10}$ e$^-$/bunch $\equiv I_{bunch} = 3.46$ mA
beam intensity, multibunch (20)	$\approx$	22.4 nC $\equiv 0.7\ 10^{10} \times 20$ e$^-$ $\equiv I_{bunch} = 48.5$ mA
accelerating frequency f_{RF}	$=$	714 MHz
revolution frequency f_{rev}	$=$	$f_{\mathrm{RF}}/330 = 2.1636$ MHz $\equiv t_{rev} = 462.18$ ns
bunch spacing t_{bunch}	$=$	$t_{\mathrm{RF}}/2 = 2.8011$ ns
batch spacing t_{batch}	$=$	$t_{rve}/3 = 154.06$ ns
horizontal betatron tune	$\approx$	$15.234 \equiv f_{\mathrm{h}} \approx 506$ kHz
vertical betatron tune	$\approx$	$8.567 \equiv f_{\mathrm{v}} \approx 1200$ kHz
synchrotron tune	$\approx$	$0.0045 \equiv f_{\mathrm{s}} \approx 9.7$ kHz
repetition frequency f_{rep}	$=$	1.56 Hz $\equiv t_{rep} = 640$ ms
beam time t_{beam}	$=$	460.41 ms ($\equiv$ turn # 996170)

Table 1: Beam parameters of the ATF damping ring

Table 2 lists some machine and beam parameters of the ATF damping ring. In standard operation a single bunch is injected from the S-Band linac on axes into the damping ring. After $\approx$ 200 ms all injection oscillations are fully damped and the beam remains for another 400 ms in the machine before being extracted. This operation repeats at a 640 ms cycle time, and also allows for multibunch fillings of 3 batches, each up to 20 bunches spaced by 2.8 ns, in case the beam extraction is suppressed.

3 The BPM Upgrade

3.1 Overview

A Resolution of 10-20 μm is measured with the current ATF BPM read-out system. This does not meet the requirements for the corrections of non-linear effects in the ATF damping ring, and to achieve the ultimate low vertical beam emittance. A first initiative to upgrade the BPM read-out system was started in 2006, based on analog downmix modules and digital down converter receivers from Echotek, achieving 0.5-2 μm RMS resolution.

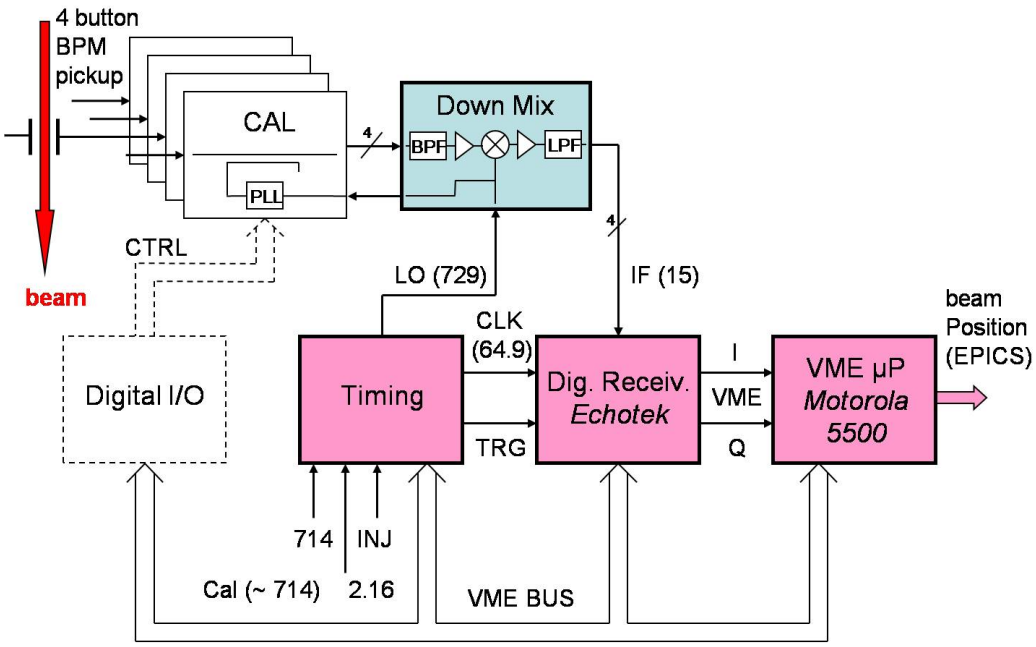

Figure 2: Schematic overview of the upgraded BPM hardware (one pickup = four channels).

Fig. 2 gives an overview of the new BPM read-out hardware, shown for single button-style pickup. The four electrode signals of each button-style BPM pickup – the only unchanged component – are processed separately up to the VME CPU, where the actual position normalization and calibration takes place. All analog hardware, i. e. downmix modules and calibration signal generation (under development), is located in the tunnel; all digital

hardware is located in two VME crates in the corresponding west and east arc huts.
The upgraded hardware consists of:

- The *downmix module* receives the four signals from the button-style pickup, filters the 714 MHz frequency content (BW $\approx$ 10 MHz), and downconverts this signal to a 15.1 MHz output signal.
- The *calibration/test signal* generation is under development, a principal function test at ATF proved the feasibility.
- Each of two *VME chassis* outside the tunnel holds:
  - A set of 5 *Echotek* digital receiver modules with each 8 channels to read-out two BPM's.
  - A *timing module* to generate all required trigger, clock and RF signals.
  - A *Motorola* 5500 CPU controller board for data collection and post-processing.
  - A *digital I/O* module was used temporarily, the final design of the calibration unit will make use of a CAN fieldbus for it's control.

3.2 Button-style BPM Pickup

The ATF damping ring is equipped with a total of 96 button-style BPM pickup stations. The button electrodes are mounted under a rotation of 45^0 into the beam pipe of circular cross-section (24.4 mm diameter), to avoid the direct synchrotron light. The 12 mm diameter button electrodes span 15.7 % (equiv. 56.4^0), which results in an electrical beam-to-electrode coupling of 15.9 % for a centered beam.

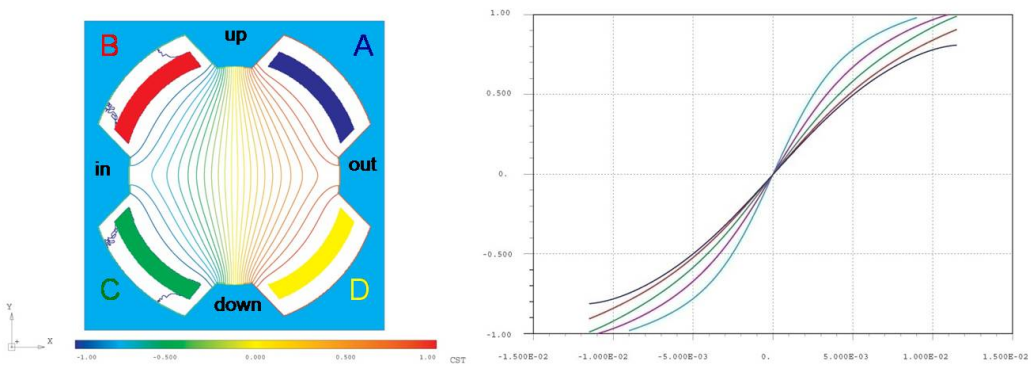

Figure 3: Horizontal position characteristics of the ATF damping ring button-style BPM pickup.

Fig. 3 shows the results of a numerical analysis, i. e. solving the *Laplace* equation for the 2D cross-section. The normalized position characteristics are plotted in terms of equipotentials:

$$\phi_{hor} = \frac{(\phi_A + \phi_C) - (\phi_B + \phi_D)}{\sum \phi} \qquad \phi_{vert} = \frac{(\phi_A + \phi_B) - (\phi_C + \phi_D)}{\sum \phi}$$

which are identical in horizontal (shown) and vertical plane, due to the pickup symmetry. A 5th order 1D polynomial fit at $\phi_{\mathrm{hor}}(y=0)$, resp. $\phi_{vert}(x=0)$ approximates this result, and is implemented in the read-out software to calibrate the intensity values of the four electrodes to a beam displacement:

$$\mathrm{Pos}[mm] = 9.35\phi + 1.00\phi^3 + 7.79\phi^5$$

A more accurate 2D fit is also prepared to correct for the higher order non-linearities, but not yet implemented in the read-out software.

The high-pass like transfer impedance of the pickup was estimated analytically, resulting in a value of $Z_b \approx 0.735\ \Omega$ at the operation frequency on the downconverter input $f_{in} =$ 714 MHz.

3.3 Analog Signal Processing

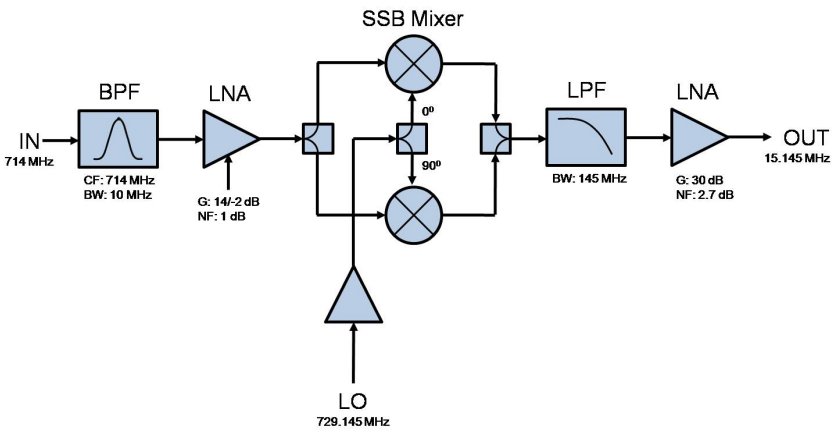

Figure 4: Analog downconverter schematics, one (of four) channel shown.

The analog bandwidth and sampling rate of the analog-to-digital converter (ADC), as well as other hardware specifications, limit the uses of the digital signal processing in the Digital Down Converter (DDC) receiver to analog signal frequencies < 40 MHz (by using under-sampling techniques this upper frequency limit could be extended somewhat). The transfer impedance of the button electrodes is poor at frequencies < 100 MHz, thus a high signal frequency has to be used to get a sufficient good S/N-ratio. For this reason an analog downconverter, including filters and gain-stages, is switched in front of the DDC receiver, to pre-process the button signals accordingly. Fig. 4 shows a simplified block diagram of a single channel of this downmix module, which is located in the tunnel close to each BPM pickup station. The required $f_{LO} = 729.145$ MHz signal is fanned-out from the VME timing- and frequency generation module, supplying a image-rejection (SSB) mixer to convert the bandpassed pickup electrode signals $f_{IN} = 714$ MHz to $f_{IF} = 15.145$ MHz. The downconverter unit includes a gain switchable low-noise amplifier (LNA), as well as gain and filter stages in the IF section.

3.4 Digital Signal Processing

Following the analog downconverter, the four BPM signals are digitized and digitally downconverted to baseband in a commercial 8-channel digital receiver board (*Echotek ECGR-GC814*). Each of the 8 DDC channels on this VME64X board is made up of a combination of an ADC (*AD6644*), *GC-4016* (TI DDC), FPGA, and a 128 KW FIFO.

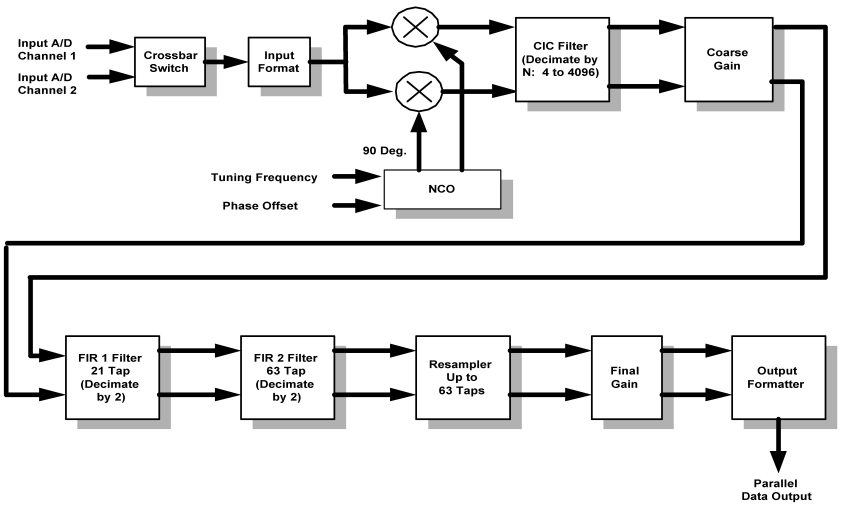

Figure 5: *Texas Instruments GC-4016, "Graychip"* digital downconverter (DDC), one (of four) channel.

The key of the digital signal processing is the 4-channel *GC-4016 "Graychip"* ASIC (Fig.5). Each selected channel receives the digitized 15.145 MHz IF data and produces a filtered, decimated stream of I-Q data pairs for each BPM channel. This data is further processed in the VME front end processor to generate the final intensity value computed by taking the square root of the sum of the squares of the I-Q pair for each channel (button electrode signal). The displacement (beam position) information is finally computed by combining the data of all electrode channels according to the equation shown in section 3.2.

All DDC NCO's are programmed to 15.14545 MHz, shifting the IF frequency to baseband. Once the BPM signal is at baseband the decimation rate of the 5-stage CIC filter is set to 4 in the wideband mode (the minimum decimation achievable in the ASIC), but to 2747 in the narrowband mode, a rate calculated from the combination of the RRC FIR filter response and decimated clock frequency.

The lowpass FIR filters (CFIR and PFIR) that follow the CIC stage in the *wideband mode* are fundamentally calculated to notch out the 2.1636 MHz revolution frequency harmonics, still present in the digitized signal. This is achieved by combining the number of FIR taps (32 taps) and clock rate in a way that the low-pass sinc function zeros appear at $n \times 462.18$ ns. With these settings 4 data points per turn are sampled, allowing the consecutive acquisition of 32k turn-by-turn data. The bandwidth of $\approx$ 500 kHz (wideband mode) gives a true turn-by-turn time resolution, thus permits the measurement of betatron and synchrotron tunes. beam orbits at injection or ejection, etc. As the wideband mode data acquisition is

externally triggered and the VME timing provides flexible delay functions, beam orbits can be taken at injection, ejection, or any other selectable time during the damping cycle.

The CIC high decimation rate used in the *narrowband mode* produces a 2 kHz moving average filter. Further filtering in the CFIR and PFIR sections are implemented as root raised cosine (RRC) filters, obtaining a band rejection greater than 90 dB and bandwidth of 1 kHz. This bandwidth rejection allows the processing of 714 MHz BPM signals in presence of 714.2 MHz calibration tone simultaneously by using two adjacent DDC channels, with one NCO tuned to 15.145 MHz and the second one to 14.945 MHz. The desired IF signal is shifted to baseband and the unwanted one is filtered by the RRC FIR filter. The resulting I-Q pair from each adjacent channel is stored in the FIFO and sorted by the front end for processing.
The narrowband filter output is started at the 500,000 turn after injection and the data rate is f_{CLK}/total decimation rate = 69.236171 MHz/10988 = 6.30107 kHz, an averaged value is clocked out every 158.7 μs. The DDC is programmed to output 1280 points, corresponding to 200 milliseconds of orbit data which is further averaged with a boxcar filter to filter out 50 Hz component from the magnet power supplies.

4 First Results and Outlook

During operation in February and May 2007 seven dedicated, plus some parasitic machine shifts were used for commissioning and testing the upgraded BPM stations with beam. First (preliminary) results show a substantial reduction on the beam intensity ($\approx 50\times$), degrading the beam position measurements. In wideband mode, betatron ($f_h \approx 387$ kHz, $f_v \approx 1212$ kHz) and synchrotron tunes ($f_h \approx 9.7$ kHz) could be identified, the short-time, broadband turn-by-turn resolution is a few mum. In narrowband mode an SVD algorithm was applied, after additional filtering and removal of 50 Hz components, in order to distinguish between BPM systematics and beam motion. Using this method a narrowband resolution of 200-400 nm (preliminary!) could be estimated. As first application a series of beam based alignment (BBA) measurements were taken, showing a substantial improvement ($> 10\times$) on the reproducibility of the quad-to-BPM offset.

The final goal for the ATF damping ring BPM collaboration is the upgrade of a substantial amount ($\approx 2/3$, or even all!) of the 96 BPM stations with this high resolution read-out system, to supply a powerful tool to minimize the vertical beam emittance. The BPM hardware also has to include a calibration system to detect long term drift effects degrading the reported beam position, even during beam operation. Therefore a revised analog downconverter and calibration unit is under currently development. A prototype will be tested in late 2007, It will include remote control and test functions, and needs dedicated software support. In early 2008 a decision has to be made on the production quantity of these analog modules and the total number of upgraded BPM's, to allow the realization within spring 2008.

5 Acknowledgments

Special thanks to Marc Ross, who started this activity as part of the US-Japan linear collider beam instrumentation collaboration efforts.