A WIDE APERTURE QUADRUPOLE FOR THE FERMILAB MAIN INJECTOR SYNCHROTRON*

D.J. Harding#, L. Bartelson, B.C. Brown, J.A. Carson, W. Chou, J. DiMarco, H.D. Glass, D.E. Johnson, V.S. Kashikhin, I. Kourbanis, W.F. Robotham, M. Tartaglia
Fermilab, Batavia, Illinois, USA

Abstract

During the design of the Fermilab Main Injector synchrotron it was recognized that the aperture was limited at the beam transfer and extraction points by the combination of the Lambertson magnets and the reused Main Ring quadrupoles located between the Lambertsons. Increased intensity demands on the Main Injector from antiproton production for the collider program, slow spill to the meson fixed target program, and high intensity beam to the high energy neutrino program have led us to replace the aperture-limiting quadrupoles with newly built magnets that have the same physical length but a larger aperture. The magnets run on the main quadrupole bus, and must therefore have the same excitation profile as the magnets they replaced. We present here the design of the magnets, their magnetic performance, and the accelerator performance.

INTRODUCTION

The Fermilab Main Injector synchrotron serves a variety of roles, requiring that beam be injected and extracted at seven different places around the ring, with most systems used in both roles at different times. The four high energy (120 GeV or 150 GeV) extraction channels each include three Lambertson magnets to achieve the necessary bend, with the ring lattice forcing a quadrupole magnet between two of the Lambertsons in the string. Since the original installation used the same quadrupoles (in three lengths) everywhere, the aperture was severely constricted compared to the rest of the ring. This was immediately proved by the losses at those locations.

With the advent of the NuMI beam line, the intensity demands for 120 GeV protons to produce neutrinos jumped dramatically. The commissioning of a resonant extraction system to provide 120 GeV protons for a beam to a test area introduced additional complexity to the geometry.

These needs led to the decision to replace the quadrupoles at all the injection and extraction points with larger aperture magnets.

REQUIREMENTS

The basic requirement on the new magnets was that they perform identically to the old magnets [1-4] but have as large an aperture as feasible. The integrated gradient needed to be the same as the old magnets over the full range of excitation, since old and new magnets would be running on the same bus. The field uniformity was required to be as good as before, but over the larger aperture.

MAGNET DESIGN

With the integrated gradient per ampere fixed and the magnet length set, the pole tip radius was limited to the few values determined by the suitable numbers of turns per pole. The radius and number of turns cannot be arbitrarily large, as the pole tip field increase with radius, leading to saturation and a mismatch with the old magnets. The old magnets have four turns per pole, a pole tip radius of 41.73 mm, and a pole tip field of 1.23 T at maximum excitation. Magnetic modeling showed that with six turns we would have a good match at all excitations, but by choosing a steel with a higher saturation field we could push to seven turns, a 55.21 mm radius, and a 1.62 T pole tip field. The primary magnet properties are summarized in Table 1.

Table 1: Magnet Properties

Property	**Old**	**New**	**Units**
Pole radius	41.73	55.21	mm
Steel length	2.31		m
Main coil turns per pole	4	7	each
Trim coil turns per pole	-	18	each
Gradient at 8 GeV (injection)	1.7		T/m
Gradient at 120 GeV (extraction)	23.5		T/m
Gradient at 150 GeV (extraction)	29.3		T/m
Pole tip field at 150 GeV	1.23	1.62	T

The design features four identical yokes and four identical coil packages. The yokes are composed of 1.52 mm thick laminations stamped from steel specified by its magnetic properties. The main coils are 14.35 x 25.4 mm copper with an 8.9 mm diameter water passage through the middle. The individual coils were wrapped in dry fiberglass tape and vacuum impregnated with epoxy for insulation. Four magnet quadrants were assembled around a beam tube with four lobes to maximize the useful aperture. An end view drawing of the magnet is shown in Figure 1.

* Work supported by the U.S. Department of Energy under Contract No. DE-AC02-07CH11359.
# harding@fnal.gov

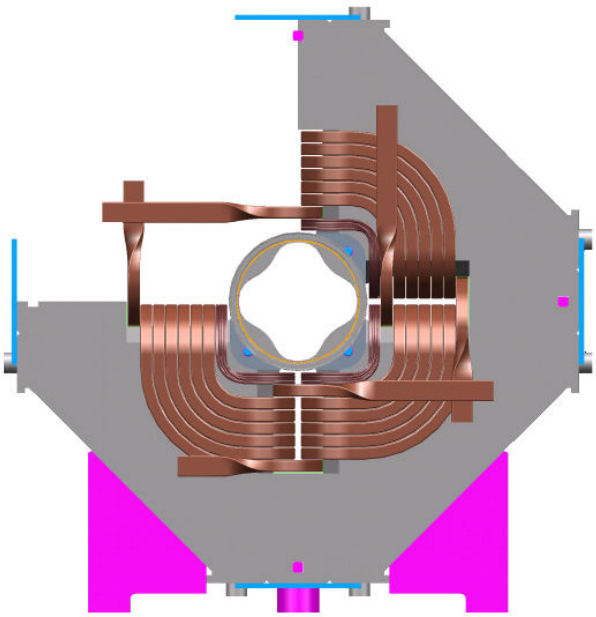

Figure 1: Wide aperture quadrupole magnet

Not having complete confidence in our knowledge of the magnetic properties of the steel before we bought it, and recognizing the uncertainties in our 3-D model of the end field, we built into the magnets two tuning features: adjustable pole ends and trim coils. Both features are shown in Figure 2.

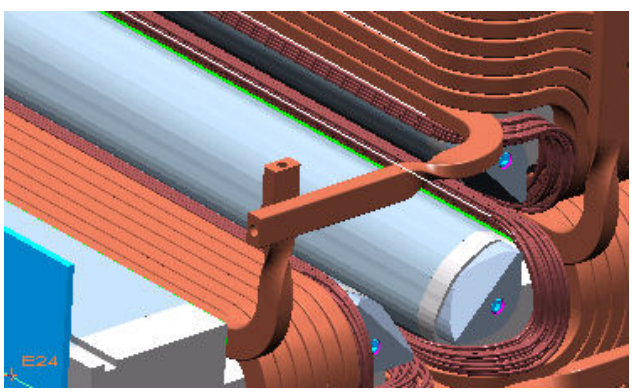

Figure 2: Cut away drawing of magnet end showing the removable, chamfered pole tip and the trim coil.

The poles were designed with removable end pieces that could be shimmed to adjust the length of the magnet by 20 mm in either direction (out of 2.13 m). These removable pole tips could also be removed after the magnet was assembled and machined to correct the field uniformity by adding or subtracting a 12-pole or 20-pole contribution. As it turned out, the initial pole design needed no modification in order to meet the specification.

To accommodate possible deviations from the desired excitation profile, we built into the coil packages a trim coil that could be powered in parallel with the main coil. Balancing the conflicting desires for low inductance and low current, and accounting for the mutual inductance with the main coils, we chose 18 turns per pole for the trim coils with the specification of allowing ±2% adjustment at full excitation. These trim coils proved essential to meeting the performance requirements, as will be discussed below.

PERFORMANCE

The magnets were measured by rotating a Morgan probe in the aperture with the magnet current held at each of the measurement currents. By selecting the probe winding to be digitized, the gradient field or any of several harmonic components could be measured with good selectivity. Since the interesting aperture extends beyond the pole tip radius, we chose a 70 mm diameter probe, smaller than the pole tip diameter. This choice allowed positioning the probe off-axis and exploring the magnetic field on the center plane beyond the pole radius.

Integrated Strength

In the linear range, the average response of the old quadrupoles had been measured as 0.0122 T-m/m/A. Plotting the difference of the measured integrated strength from this linear component emphasizes the saturation and hysteretic behavior of the magnets and allows a sensitive comparison of the new with the old. Figure 3 shows one new magnet compared with the average of the old magnets. As expected from higher pole tip fields at the same excitation, the new magnets saturate at a lower current that the old. Additionally, specifying a steel with good saturation properties led to a low silicon content and thus a higher remanent field in the new magnets compared with the old magnets.

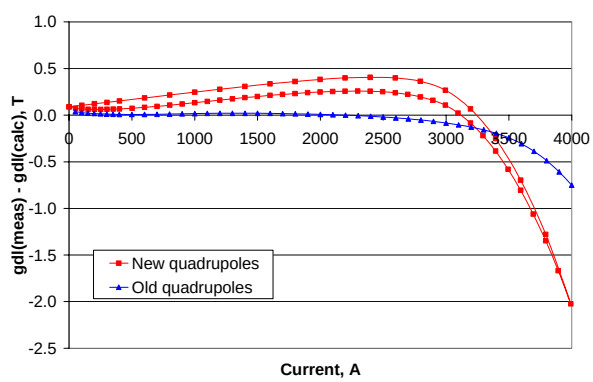

Figure 3: Deviation of the integrated gradient of the new and old quadrupoles from the linear behavior of the old magnets.

The different behavior of the two magnet styles led to the decision to use the trim coils to match the magnets in operation. By reducing the new magnet length the curves could have been matched through most of the range, but it was deemed most practical to minimize the maximum current needed in the trim coils, and the core was left as built.

Trim Coil

To understand the behavior of the trim coil, the interaction of the main and trim coils was studied at 8 GeV injection (200 A), in the linear part of the ramp (1000 A), at the 120 GeV extraction (2800 A), and at 150 GeV extraction (3600 A). In all cases, care was taken to replicate the expected operating cycle of the accelerator, approaching each measuring point monotonically from below. We could then compare d(GL)/d(NI) for the two coils, where GL is the integrated gradient of the magnet and NI is the number of turns times the current in the coil. At the three lower currents, where the steel is not in saturation, slopes agreed to within about 1%. At the highest excitation the trim coil was almost 6% more effective. The trim coil is more effective because it is positioned nearer the tip of the poles. While this difference from the naïve ratio of turns is minimal when recognized as a correction to a correction, it was easily included in the calculation of the trim coil ramp needed to help the new quadrupoles track the old quadrupoles through the various acceleration cycles.

Field Uniformity

As could be expected, the increased pole radius led to a significantly improved gradient uniformity over the central region of the aperture compared to the old magnets. Unfortunately, that is the region obscured by the septum of the Lambertson magnets. The gradient uniformity does remain within tolerances over the region expected to be populated by the beam in operation.

To visualize the field uniformity, we reconstruct the integrated gradient as a function of position from the measured harmonic decomposition of the field. Figure 4 shows the fractional deviation from the integrated gradient on the magnet center line. The full aperture is covered by taking overlapping measurements with the probe offset by 25 mm on either side of the center line. We are pleased with the consistency of the overlapping measurements and with the field uniformity that was achieved. As noted above, the uniformity could have been improved further by tuning the pole tip ends, but the accelerator performance did not require this and the magnets were left as originally built. Note that the old quadrupoles, which were recovered from Fermilab's original Main Ring for reuse in the Main Injector, were designed with a systematic octupole which shows up in Figure 4 as a quadratic deviation of the gradient.

Magnetic Center

The magnetic center of each magnet was determined using a single stretched wire and compared to the mechanical center. In all cases the centers agreed to better than 175 µm, and the standard deviation of the differences was 76 µm.

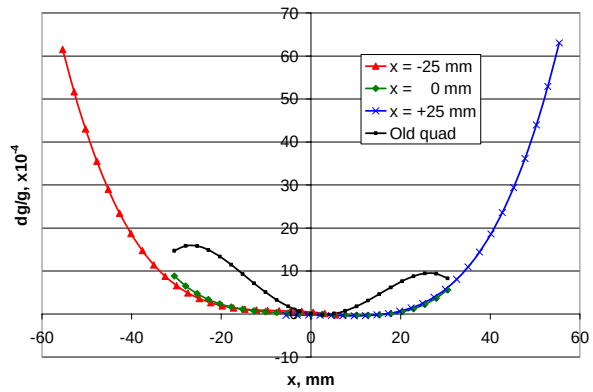

Figure 4. Fractional deviation of the integrated gradient from the central integrated gradient as a function of transverse position. The field of an old quadrupole is compared to that of a new quadrupole.

Magnet Consistency

The magnet to magnet variations are well within acceptable limits. The full range in integrated strength is 0.12%, less than the equivalent of two laminations. Only a single trim coil curve is needed, not a different correction for each magnet. The variation in the sextupole field, a sensitive measure of construction errors, varies from magnet to magnet but contributes no more than 2×10^{-4} of the gradient to the field at 25 mm.

CONCLUSIONS

Based on the magnet measurements, we expected the new quadrupole magnets to function identically to the old magnets when installed in the Fermilab Main Injector Synchrotron with the exception of reduced losses. Indeed, as reported in Reference [5], the beam circulated immediately and once the closed orbits were adjusted to take advantage of the increased aperture the losses were reduced substantially.

REFERENCES

[1] H. Hinterberger, *et al*, "Quadrupole Magnets of the NAL Main Accelerator," IEEE Trans. On Nuc. Sci, 1971, NS-18,

[2] B.C. Brown, *et al.*, "Harmonic Analysis of Fermilab Main Ring Quadrupole," PAC'91, May 1991.

[3] D.J. Harding, *et al.*, "Magnetic Field Measurements of the Initial Production Main Injector Quadrupoles," PAC'95, May 1995.

[4] D.J. Harding, *et al.*, "Magnetic Field Strength and Shape Measurements of the Fermilab Main Injector Quadrupoles," PAC'97, May 1997.

[5] W. Chou, *et al.*, "Operational Aspects of the Main Injector Large Aperture Quadrupole," PAC'07, June 2007.