FERMILAB-05-088-AD-CD

TEVATRON BEAM POSITION MONITOR UPGRADE*

S. Wolbers, B. Banerjee, B. Barker, S. Bledsoe, T. Boes, M. Bowden, G. Cancelo, B. Forster, G. Duerling, B. Haynes, B. Hendricks, T. Kasza, R. Kutschke, R. Mahlum, M. Martens, M. Mengel, M. Olson, V. Pavlicek, T. Pham, L. Piccoli, J. Steimel, K. Treptow, M. Votava, B. West, R. Webber, D. Zhang Fermilab, Batavia, IL

Abstract

The Tevatron Beam Position Monitor (BPM) readout electronics and software have been upgraded to improve measurement precision, functionality and reliability. The original system, designed and built in the early 1980's, became inadequate for current and future operations of the Tevatron. The upgraded system consists of 960 channels of new electronics to process analog signals from 240 BPMs, new front-end software, new online and controls software, and modified applications to take advantage of the improved measurements and support the new functionality. The new system reads signals from both ends of the existing directional stripline pickups to provide simultaneous proton and antiproton position measurements. Measurements using the new system are presented that demonstrate its improved resolution and overall performance.

UPGRADE REQUIREMENTS AND GOALS

The Tevatron BPM upgrade is expected to provide significantly better accuracy, precision, and reliability as well as new measurement capabilities. The requirements for measurements during various beam conditions reflect the needs of Tevatron operations in the Run 2 era. The key specifications taken from the upgrade requirements[1] can be found in Table 1. The system is required to provide turn-by-turn and closed orbit measurements. A significant new capability is the measurement of antiproton positions.

An important goal for the upgraded system was that it be available at the earliest possible date for use during Tevatron Run 2. This influenced some of the decisions on hardware and signal processing choices.

UPGRADE DETAILS

BPM Pickups

The pickups in the Tevatron ring are part of the superconducting quadrupole assemblies and were not modified as part of the BPM upgrade. Each BPM is a pair of 50 ohm striplines 18 cm long, each subtending 110 degrees of arc, with a circular aperture of 7.0 cm diameter [2]. Each BPM measures either the vertical or the horizontal coordinate, and there are approximately 240 BPMs situated around the Tevatron ring. The pickups are directional (26dB), and are read out on both ends. Special half-length BPMs are installed near the B0 and D0 interaction regions.

* Fermilab is operated by Universities Research Association Inc. under Contract No. DE-AC02-76CH03000 with the United States Department of Energy.

Table 1 : Tevatron BPM Specifications

Key Specifications (Protons)*:
Measurement Range: ±15mm
Absolute Position Accuracy: < 1.0 mm
Long Term Position Stability: < 0.05 mm
Best Orbit Position Resolution: < 0.02mm
Position Linearity: < 1.5%
Relative Position Accuracy: < 5%
Intensity Stability: < 2%
Key Specifications (Pbars)*:
Measurement Range: ±15mm
Absolute Position Accuracy: < 1.0 mm
Long Term Position Stability: < 0.05 mm
Best Orbit Position Resolution: < 0.05mm
Position Linearity: < 1.5%
Relative Position Accuracy: < 5%
Intensity Stability: < 2%
**All values are 3σ*

Electronics and Signal Processing

The 53 MHz component of the BPM pickup response is used to measure beam positions. A schematic of the signal processing path is shown in Figure 1. Signals from the BPM pickups in the Tevatron tunnel are carried over foam RG-8 coaxial cables to the electronics system in one of 27 service buildings situated on the surface above the ring. Each VME subrack contains a Motorola MVME2400-0361 processor module, a timing board providing clock and interrupt signals, front-end analog filter boards providing 53 MHz bandpass filtering and signal attenuation, and 8-channel 80 MHz digital signal receiver boards from the Echotek corporation (model ECDR-GC814-FV-A). All interconnections are made using double-shielded coax cables. A photograph of a completed and installed VME subrack is shown in Figure 2.

The choice of the Echotek board was made after extensive evaluation of different signal processing strategies. It was chosen because it is a common technology for other BPM upgrades, it could be acquired

quickly, and compared to in-house boards required less engineering and testing effort. The board is very similar to those used for the Recycler BPMs at Fermilab and identical to boards acquired for the Main Injector and transfer line BPM upgrades. The Echotek digital signal receiver board consists of a 14-bit A/D converter, Graychip digital down-converter, FPGA, RAM, and VME interface. Signals are synchronously digitized at 74 MHz. Narrow-band (about 1 kHz) and wide-band (47 kHz) digital filters provide closed-orbit (CO) and turn-by-turn (TBT) measurements.

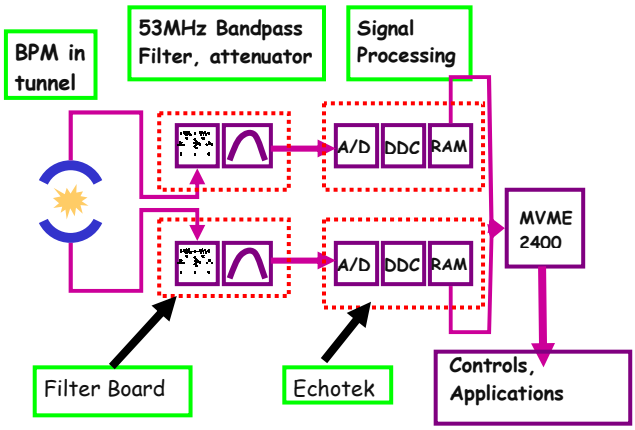

Figure 1: Tevatron BPM signal processing path

INSTALLATION AND COMMISSIONING THE NEW SYSTEM

A working Tevatron BPM system is required for the operation of the accelerator. The installation plan allowed for replacement of the old electronics with upgraded electronics service-building by service-building between colliding beams periods, or "stores". In this way only one service building (typically 8 BPMs) was unavailable for accelerator operations at any given time. The installation of the new system began in December, 2004, as the accelerator returned to operation after the fall 2004 shutdown.

Each VME subrack was assembled and tested before it was installed in a service building. Once installed and connected in the service building the system was checked for proper cable connections using diagnostic signals and with beam. Timing was adjusted for TBT measurements. All measurement modes were implemented and tested for proper functionality. Subtle problems with timing and triggering for TBT measurements were found during early phases of the commissioning. The problems were diagnosed and resolved on the test stand and were corrected during the installation and commissioning of the 27 systems. The final system was installed and connected in May 2005.

During the entire commissioning period the Tevatron was operated using a mix of old and new BPM measurements for orbit closure at injection, orbit smoothing, and other activities that required BPM information. Each service building was configured in the controls system to use either the new BPM system in that building or the old one and the switch was made when the proton signal cables were moved from the old to the new system.

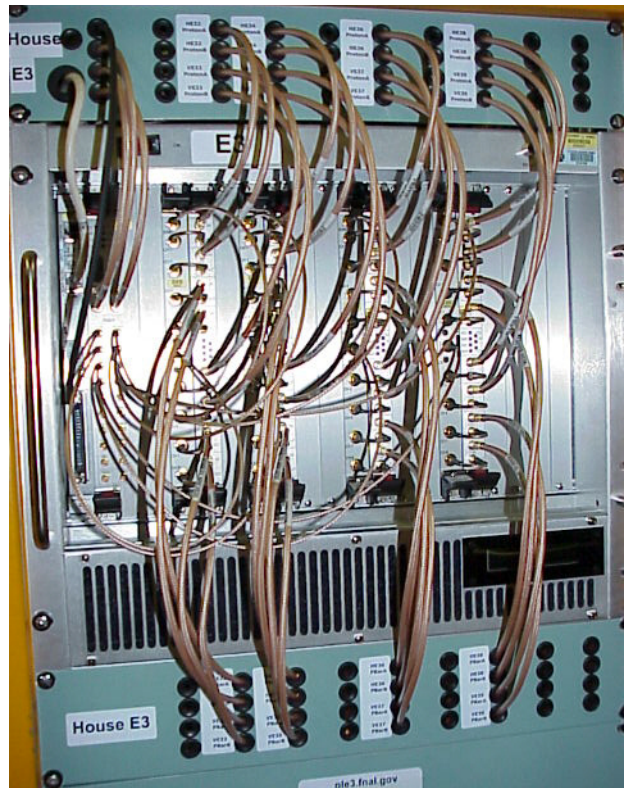

Figure 2: Completed VME subrack in the E3 service building.

SYSTEM PERFORMANCE

Measurements have been made using the new system to establish its functionality and performance. The system has performed as expected and has produced improved measurements compared to the previous system.

Closed Orbit

Transverse positions are computed using the following formula:

$$P = 26.* (|A| - |B|)/(|A| + |B|)$$

where A and B are the BPM response from the two plates and 26. is the scaling factor to convert from BPM response to position (in mm) for this pickup geometry. A final calibration of the system and higher order corrections are not included in this calculation.

An example of the performance of the new system can be seen in Figure 3. In this figure the difference in proton positions at each BPM at 150 GeV for two stores are shown with essentially all of the BPMs upgraded to the

new system. Orbit oscillations of about 100 µm are clearly seen.

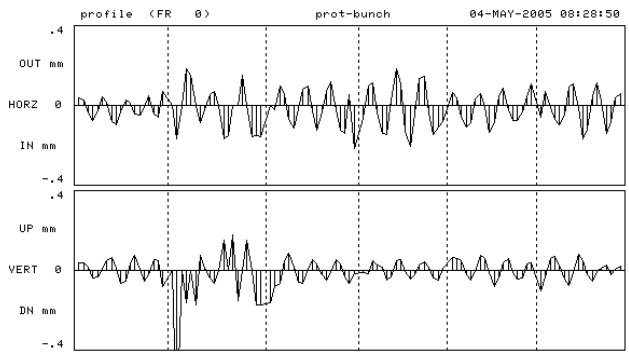

Figure 3 : Horizontal (top) and vertical (bottom) orbit differences between two stores, measured at 150 GeV. Vertical scale is +- 400 µm.

Antiproton Position Measurements

The antiproton beam positions are determined by a "deconvolution" technique that subtracts the proton signal contamination on the antiproton pickup. This subtraction is required because of the imperfect directionality of the pickups. This technique is described in more detail in a companion paper [3]. The subtraction is implemented using the following formulae:

$$A'_{Pbar} = A_{Pbar} - aA_P - bB_P$$
$$B'_{Pbar} = B_{Pbar} - cB_P - dA_P$$

The coefficients *a, b, c, d* are determined empirically. The coefficients depend on the beam position in the pickup so it is important to determine these at the beginning of every store. After the deconvolution the proton and antiproton positions at the beginning of a proton-pbar store are shown in Figure 4. The technique is being commissioned ring-wide.

Turn by Turn Measurements

The upgraded BPM system provides TBT measurements at beam injection and on request. The system provides 8192 (configurable) measurements. An example of TBT measurements on injection can be seen in Figure 5, clearly showing synchrotron oscillations.

CONCLUSION

The Tevatron BPM upgrade has been installed and commissioned. The upgrade was accomplished in an orderly fashion, replacing old with new electronics during short accelerator downtimes, always maintaining a combination of old and new BPM measurements for Tevatron operations. The new system provides much improved resolution and new functionality and early indications show it to be stable and reliable.

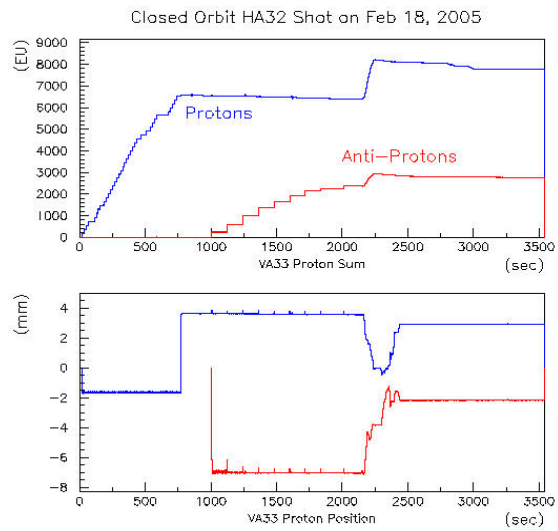

Figure 4 : Top plot: proton and antiproton sum signals. Bottom plot: Antiproton position (bottom curve) during injection and beginning of collisions.

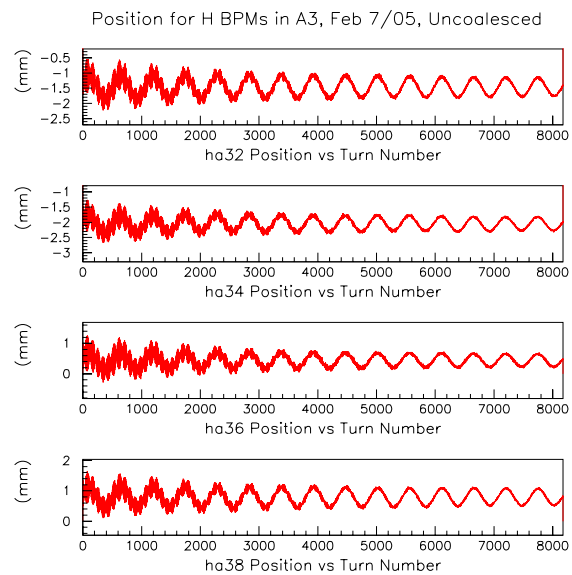

Figure 5 : Proton position at 4 locations during the first 8192 turns after injection into the Tevatron.

REFERENCES

[1] M. Martens, et. al., "Tevatron Beam Position Monitor Upgrade Requirements", Beams-doc-554, http://beamdocs.fnal.gov/cgi-bin/DocDB/ShowDocument?docid=554

[2] R.E. Shafer, R.C. Webber, and T.H. Nicol, "Fermilab Energy Doubler Beam Position Detector", IEEE NS-28, **3**, (3390) June, 1981.

[3] R. Kutschke, et. al., "Simultaneous position measurements of protons and antiprotons in the Tevatron", submitted to PAC'05, May, 2005.