FERMILAB-Conf-03/112-E June 2003

BEAM LOADING COMPENSATION FOR SLIP STACKING*

J. Steimel, T. Berenc, C. Rivetta, FNAL, Batavia, IL 60510, USA

Abstract

This paper discusses the beam loading compensation requirements to make slip stacking practical in the Fermilab main injector. It also discusses some of the current plans for meeting these requirements with a digital, direct RF feedback system.

INTRODUCTION

Slip stacking takes advantage of the extra longitudinal phase space in the main injector. It is a method of injecting two batches of beam into the main injector and combining the two batches into one double charged batch before extracting to the antiproton target. Two batches of beam are injected consecutively into the main injector with slightly different momenta. The different momentum batches have slightly different velocities, and one batch eventually overtakes the other batch. When the two batches completely overlap, the RF voltage is increased to provide a bucket big enough to contain the entire momentum space of the two batches.

The momentum separation between the batches must be large enough, compared to the bucket size, to minimize the interference between the two batches but not larger than the momentum acceptance of the main injector. For optimal slip stacking, the bucket size should be just big enough to contain the longitudinal emittance of the injected beam. Maintaining small bucket sizes becomes difficult for high intensity beams in the presence of beam loading on the cavities.

Low intensity slip stacking has already been demonstrated in the main injector [1]. With a total beam intensity of 0.8e12 protons, two batches were combined with a total emittance dilution of about 60%. Unfortunately, the main injector must slip stack 9.0e12 protons/cycle, and beam loading already greatly degrades slip stacking performance at 3.0e12. Beam loading compensation is required for practical slip stacking performance.

Slip stacking simulations have been studied to determine how much beam loading compensation is required for full intensity with emittance preservation [2]. The simulations show that the beam loading compensation must reduce the effect of beam current by 40dB at the fundamental resonance of the cavity and by 26dB at the first revolution harmonic. The rest of the paper discusses the present beam loading compensation system in the main injector and how to modify the system for the slip stacking specifications.

* Work supported by the Universities Research Assoc., Inc., under contract DE-AC02-76CH03000 with the U.S. Dept. of Energy.

PRESENT SYSTEM

The purpose of the present beam loading compensation system is to improve the reliability of the RF system under beam loaded conditions, and it also improves low voltage manipulations like coalescing. The system consists of direct RF feedback systems at each RF station, and a global feedforward system derived from a wideband beam intensity detector.

Direct RF Feedback System

The main injector is equipped with a direct RF feedback system [3]. Each cavity in the main injector has an independent feedback system. The system consists of a module that converts the signal from the cavity gap monitor to baseband.

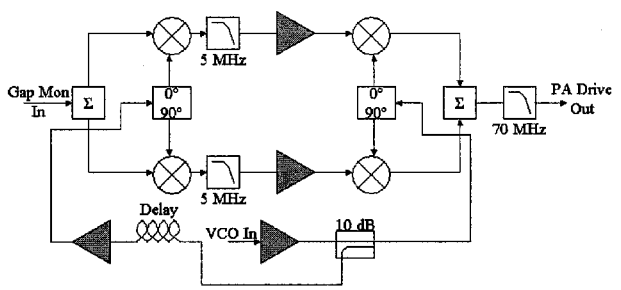

Figure 1: Block diagram of the beam loading module. The superheterodyne structure is designed to track the phase response with the changing VCO frequency. The downconvert reference is synchronized with the cavity gap signal, and the upconvert reference in synchronized with the fanout.

The signal is low-pass filtered, up-converted, and combined with the fundamental amplifier drive signal. It is important that the phase of the open loop response remain 180° at the fundamental frequency for maximum stability margin. The system maintains the proper phase by using different delays for the up-convert and down-convert RF references in the feedback module. The up-convert reference delay is matched to the LLRF fanout delay to the cavity, and the down-convert delay is matched to the cavity gap signal from the tunnel. With the proper delays on the references, the feedback module will adjust its delay to maintain the proper phase intercept for the system.

Maintaining proper phase intercept improves the stability margin, but there is still a stability limit on the allowable open loop gain on the system. The current main injector system will only allow an open loop gain of

about 26 dB with a reasonable gain margin. Equation (1) shows the relationship between maximum gain and the Q of the cavity, the cavities resonant frequency, and the open loop delay of the system [4].

$$G_{\max} = \frac{\pi Q}{2\omega_r \tau} \qquad (1)$$

The feedback module has a fixed gain profile, in frequency, over many revolution harmonics, so the cavity response dictates the open loop bandwidth. Because of the high Q of the cavity, the open loop gain of the system rolls off quickly. Thus, the system performs insufficient beam loading compensation at any revolution harmonics other than the fundamental.

Feedforward System

The feedforward system currently being tested in the main injector uses a wall current monitor for its beam current source [5]. The signal from the wall current monitor is down-converted, filtered, and delayed digitally. The output of the digital delay drives a special cavity fanout system. Instead of having a system of equal length cables, this fanout system is designed to have delays different by the beam transit time between cavities. At each of the cavities, the signal is upconverted and combined with the drive.

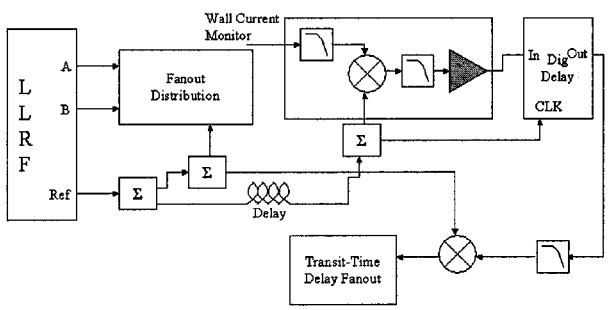

Figure 2: Block diagram of feedforward system low level processing. The output of the delay fanout is combined with the cavity drive.

The disadvantage of the feedforward system is the beam signal and power amplifier current must match very closely. There is no inherent correction mechanism like there is in a feedback system. Therefore, the system can only operate in very well defined conditions. It cannot track energy changes or changes in RF amplitude or operating conditions. Also, it is extremely important that the signal path be completely linear, otherwise the feedforward signal will be too distorted to cancel out the beam signal when the two meet in the cavity. The power tube is a major source of nonlinearity in the signal path.

SLIP STACKING FEEDFORWARD

Slip stacking brings a different challenge to feedforward that does not exist in the present system. The first difference is the 100% amplitude modulation of the fundamental component of the beam spectrum. The second difference is the phase modulation of the fundamental component relative to the acceleration frequency. Compensating for these differences places a strain on the linearity of the power amplifier and produces new hazards in the feedforward system.

Amplitude Modulation Compensation

As the batches of approximately equal charge amplitude slip past each other, there will be a change in the amplitude of the fundamental beam component. When the RF phases of the two batches are coincident, the fundamental amplitude will be twice that of a single batch. When the phases are opposing, the fundamental amplitude goes to zero. This means that the feedforward compensation will operate over a very large dynamic range.

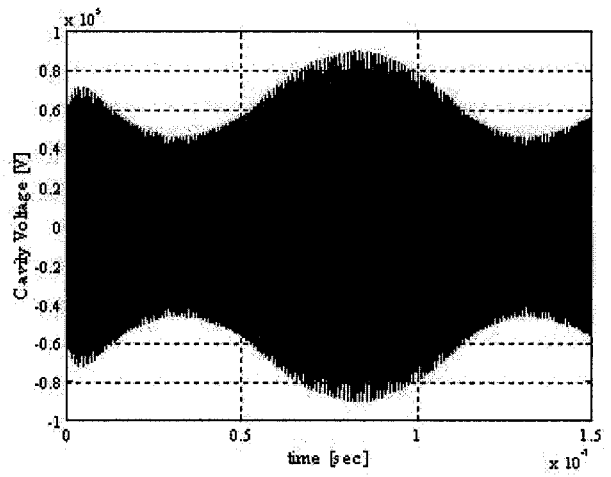

Figure 3: Simulated RF voltage in operating cavity with two batches of beam slipping against each other.

The RF power tube does not have perfect linearity over its operating range. Large signal variations in its grid drive will reveal its non-linearity. Proper cancellation of the beam loading current requires that the feedforward system produce a current pulse that closely resembles the beam pulse. If the net system is non-linear, then there will be an amplitude mismatch in the cavity that will limit the cancellation.

Phase Modulation Compensation

Another problem with the current feedforward system is that the resultant phase of the two fundamental components rotates with respect to a particular cavity drive. This means that the current system will try to compensate the cavities with the wrong amplitude and phase of beam signal. There are three possible solutions to this problem. One solution involves deriving both the in-phase and quadrature component of the beam signal from the pickup. Then, phase information is preserved. Another solution would be not to downconvert at all, but sample at a fast enough rate to preserve the data at and around the fundamental with the required bandwidth. The third solution would be to distribute a reference frequency that is phase matched to the amplitude modulated carrier of the beam frequency while slipping. This frequency

would be the mean of the two fundamental frequencies. The result of downconverting with this reference would be the pure amplitude modulation of the slipping buckets.

The disadvantage of using a method that preserves phase is that a parasitic longitudinal feedback loop develops. The system has significant delay, and if the gain required for proper compensation is high enough, the synchrotron oscillations could be driven unstable.

SLIP STACKING FEEDBACK

The current direct RF feedback modules in the main injector already provide fundamental frequency compensation during slip stacking without modification. However, to make slip stacking practical, the gain of the system must be increased by a factor of 10, and the system must provide transient beam loading compensation. The increased gain will put the current system well beyond it stability limit. In order to provide more gain at the fundamental as well as transient beam loading compensation at the revolution harmonics, the feedback module must be modified. First, to insure the proper open loop phase intercept for multiple revolution harmonics, the system must have a delay equal to some multiple of the revolution period [6]. Second, the bandwidth of the filter should not be dictated by the cavity, since this is not optimal for stability. The bandwidth of the system could be reduced to the point of just containing the frequency difference between the two batches in a slip stacking cycle. Of course the filter would necessarily have the same shape around the fundamental frequency as well as multiple revolution lines. This implies some kind of digital filter sampling at the fundamental frequency with taps at multiples of the revolution frequency.

One possible design uses a DSP with a highly parallel architecture, clocked at a multiple of the fundamental frequency. The down-converted signal from the cavity gap is digitized and stored in FIFO memory blocks. Data

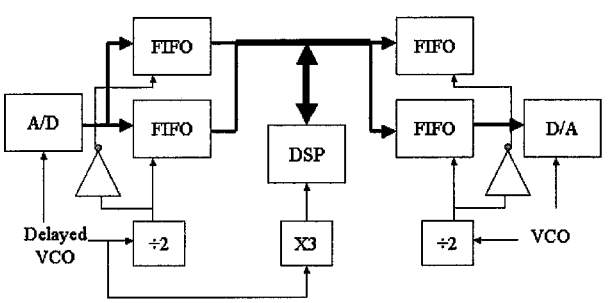

Figure 4: Block diagram of digital direct RF feedback filter.

from the memory blocks are burst into the DSP, and the DSP performs the filtering calculations. Output data from the DSP is burst into another set of FIFO memory blocks that drive a DAC. The FIFO memory blocks maintain the system delay at one revolution period. The output of the DAC is up-converted and combined with the cavity fanout drive. Calculations done for an IIR filter in the

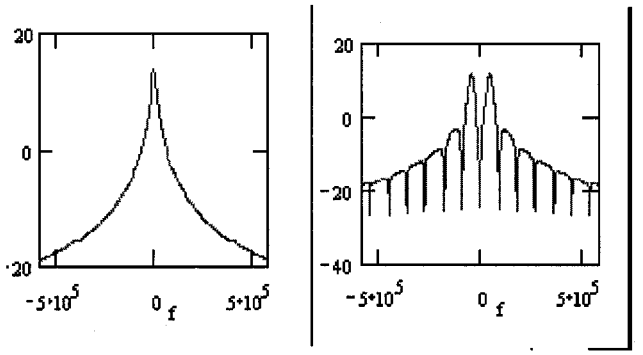

Figure 5: Comparison of cavity response without compensation and with IIR filter compensation. Horizontal scale is in Hz offset from fundamental. Vertical scale is in dB.

DSP show that open loop gains on the order of 40dB are achievable. To maximize the gain margin for the revolution harmonics, the signals for the revolution harmonics will follow a different path than the fundamental, so that they can receive a 90° phase shift. This is to compensate for the cavity response, which is reactive at the revolution harmonics.

CURRENT STATUS

The current feedforward system is being modified to include both inphase and quadrature beam signals. Once installed, the stability threshold will be investigated. Ways of regenerating the carrier frequency from the two RF frequencies are also being investigated.

A very detailed model of the RF cavity system is being produced. It should reveal conflicts between different feedback loops in the cavity system. Once completed, different types of filters can be simulated in the direct RF feedback system. If an appropriate digital filter can be simulated inside the cavity system that meets the slip stacking requirements, design and construction will begin.

REFERENCES

[1] Kiyomi Kobe, et al, "Slip Stacking at Fermilab Main Injector," PAC'03, These proceedings.

[2] J. MacLachlan, "The Beam Dynamics of Slip Stacking," FERMILAB-FN-0711 (Nov 2001).

[3] J. Dey, J. Steimel, J. Reid, "Narrowband Beam Loading Compensation in the Fermilab Main Injector Accelerating Cavities," 2001 PAC, p. 876, Chicago, June 2001.

[4] R. Garoby, "Beam Loading in RF Cavities", Joint US-CERN School, CERN/PS 91-33 (RF) (1990).

[5] J. Dey, et al, "53 MHz Feedforward Beam Loading Compensation in the Fermilab Main Injector," PAC '03, These proceedings.

[6] F. Pedersen, "Beam Loading Aspects of TRIUMF KAON Factory FR Systems", TRI-DN-85-15 (1985).