FERMILAB-CONF-99-438-AD

Proceedings of the 1999 Particle Accelerator Conference, New York, 1999

ELECTRON GUN BEAM EXTRACTION WITH MOSFETS

F. Niell, Fermilab, Batavia, IL

Abstract

Electron beams with an energy range of 10keV at 2A requiring intensity modulation with bandwidth from 50kHz 7.5MHz pose an interesting problem to the RF designer. Driving the extraction electrode of an electron gun can be a challenge with these requirements. The straight forward approach is the construction of a vacuum tube, single ended amplifier capable of delivering the anode voltage to the extraction electrode of the gun. However, vacuum tubes of this size and power are becoming increasingly expensive, and as the technology dies, the reliability of new components comes into question. The logical alternative is the implementation of solid state electronics. However, the 7.5MHz 7kV requirements pose a problem, as the solid state high voltage, high current technology does not exist in a single package. A new system of driving the extraction electrode of a Pierce type gun was developed using MOSFETs. Arranged in ultra-reliable "bricks" of series-parallel arrays, the MOSFETs allow for highly efficient amplification-mode operation. Amplitude linearity to 0.1% is achieved. The proposed system, capable of producing 7kV at 25kW will be implemented in the Electron Compressor experiment at Fermilab.

1 INTRODUCTION

The Fermilab Tevatron collider has several constraints on its luminosity and intensity. One of the limits on luminosity is the beam-beam interaction. The space charge of one beam creates an electromagnetic lens for the other beam in a collider (and vise versa), and thus, perturbations arise in both beams. This limit is caused by a bunch-to-bunch tune spread introduced by the lensing effect. This tune spread is one cause of the wide distribution of tunes and higher-order lattice resonances seen on the Tev beam footprint.

There have been several suggested methods for beam-beam compensation, but one that shows some promise is the linear electron lens. A beam of electrons, traveling in the opposite direction of the antiproton beam is used to compensate for the beam-beam effect. The amount of electromagnetic lensing a “stiff” beam of antiprotons feels interacting with a weak beam of electrons is determined by the current density of the electron beam. Thus, a properly modulated beam of low energy, high intensity electrons could compensate for the beam-beam interaction.

The Electron Compressor experiment is a collaboration set up to determine the feasibility of a Tevatron electron lens for the Tev 2 run [1].

2 ELECTRON COMPRESSOR

The Electron Compressor is a linear electron beam of roughly 3A in a solenoidal magnetic field of 4kG [2]. The electron beam comes from a high perveance Pierce type electron gun.

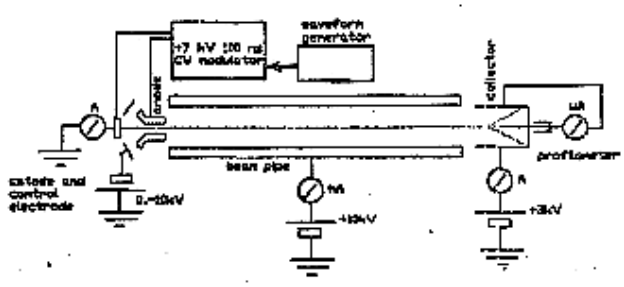

Figure 1: Electrical scheme of the “electron lens” [2].

The Pierce gun has an extraction electrode, with which the current density of the beam may be controlled. The extraction electrode allows the electrons from the cathode region to escape the field from the control electrode, and be pulled into the accelerating field supplied by the anode. The extraction electrode itself has a funnel shape [2, contains more detailed device information]. This geometry gives the extraction electrode a capacitance to ground of approximately 72pF.

Modulation of the electron beam current density at the bunch spacing of the Tevatron, as planned in the Tev 2 run, of 132ns makes the extraction electrode look like 300 Ohms due to the. The geometry of the structure requires about 7kV peak to turn the beam on. This translates to 25kW RMS power. The predicted waveform necessary to drive the extraction electrode to compensate the beam-beam effect have been calculated (see Fig.2).

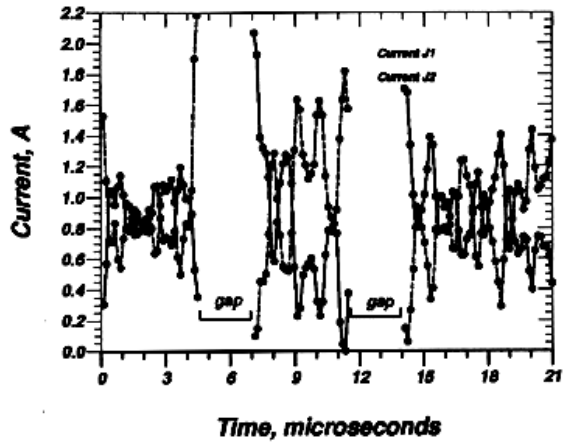

Figure 2: Predicted waveform of modulated current density Beam currents for 2 lenses are shown. J1, J2 are the two waveforms of interest [1]

FFT shows that there are components of this waveform that range from 50kHz to 7.5MHz. Thus, a modulator capable of supplying 25kW peak into a 72pF capacitive load with bandwidth from 50kHz to 7.5Mhz is needed.

3 MODULATOR DEVELOPMENT

Traditionally, there existed only one way to provide this type of power for particle accelerator technology applications. Vacuum tubes, such as the EIMAC 4CW25000B tube, would be perfectly suited to this purpose. However, due to the costly nature of tubes, the declining product support, and poor reliability and uniformity of tubes available on today's market, the author chose to pursue a new approach.

A means for replacing conventional tube technology with new transistor technology was sought. Transistors are not easily used in the high power, high voltage, high frequency domain. Since commercially available transistors typically have a voltage limit of 1kV, several transistors are needed to operate in series to properly share the load.

Drawing on traditional cascade architecture for tubes [3], and modern transistor technology [4], a hybrid architecture was born. MOSFETs lend themselves to RF amplification well, as their power/volume ratio is high, but have a very low impedance gate. The author began with a simple Class A amplifier, utilizing the new DEI 102N20 MOSFET [5] (see Fig.3).

Figure 3: The DEI DE series MOSFETs offer 375W at 1kV, in a package that lends itself to higher frequency operation for that power level than existing 0.5" flange type MOSFETs [5]

The major difficulty with cascading MOSFET amplifiers is the requirements of the devices themselves. Each device has a linear range of roughly 75mV, and a gate voltage of 3.25V. This is a technical hurdle because the drive circuitry for each MOSFET in series must be isolated to the voltage that the cascaded MOSFETs are sitting at.

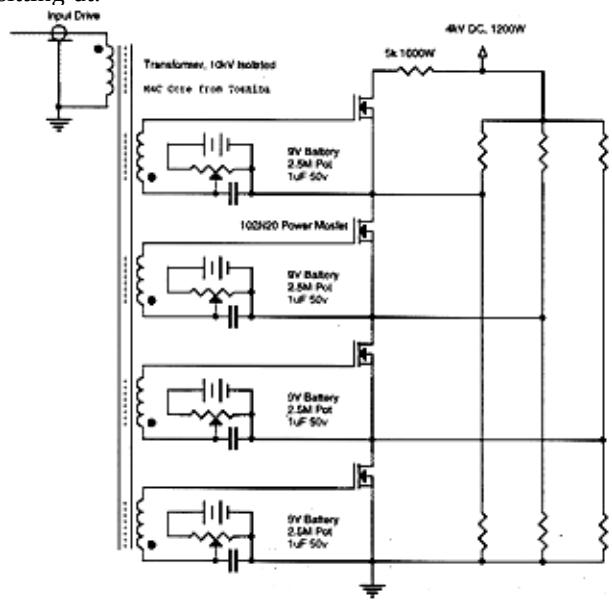

Figure 4: Circuit diagram for a "brick" of MOSFETS

Two options presented themselves. I could stand off the DC high voltage on each MOSFET with a capacitor, and thus capacitively couple the gate to the RF source. Or, I could use a wide band isolation transformer to stand off the high voltage. Since the devices must be mounted on a large water cooled heat sink, they must be electrically insulated to the voltage the cascaded MOSFET sees. This requires Kapton insulation, and creates a capacitor in series with the gate circuit to ground (due to the device geometry). This, in effect dumps the gate drive power into the space between the MOSFET and the heatsink, instead into the gate. As such, capacitive coupling was not an option.

Circuit description (see Fig.4)

An isolation transformer was constructed using an M4C Toshiba core, and RG-213 center conductor for high voltage insulation.

The gate bias supplies must be isolated to at least 10kV (maximum voltage of the modulator with safety margin), and be able to supply only a few nA. In order to supply a DC bias to the AC signal, a 1uF cap was used to act as a low Z shunt for the AC signal. Thus, the 9Volt battery, parallel with the potentiometer across the cap provides the variable gate bias. This DC offset is added to the AC signal through one of the secondaries on the transformer. The summed bias and drive signal are sent to the gate of the MOSFET.

Also, since when the MOSFETs are all turned off (no drive signal), the situation could arise that one MOSFET would potentially see more than 1kV if they are not all biased properly. Thus, an external voltage divider network was made to ensure that each MOSFET would only see 1kV drain to source.

Cooling is achieved by mounting the MOSFETs on a 5x5" square block of 1" thick copper magnet buss bar, with a cooling channel in the middle. Four MOSFETs can be mounted on the heat sink safely, and thus the resulting four MOSFET assembly is referred to as a "brick." The four MOSFETs in series are able to modulate voltages up to 4kV, and handle up to 1200W.

The series load resistance is a simple series parallel combination of 8 10kOhm, 225W resistors to make 5kOhm, 1600W resistor.

4 PERFORMANCE

The modulator currently operates over its specified bandwidth, however the power as a function of frequency is not linear, as claimed in the abstract. Recent results have shown that the claim in the abstract is not true. The bandwidth, in fact, follows the general form of a resistance in parallel with a series RC circuit. This implies that much of the frequency dependence of the modulator is due to the reactive nature of the load. A non-reactive load made of water cooled conductive ceramic resistors will be constructed in the next few weeks, and is expected to linearize the output greatly. The reactive nature of the load also current limits the output greatly, and as such, only 2.25kVpp is possible at this point. It is expected that the new load will allow the brick currently under test to modulate the entire 4kV (see Fig. 5).

Once the entire voltage dynamic range is achieved, several more bricks will be made. They will be arranged in series-parallel arrays to build up the current and voltage necessary for the full implementation of the device. Most likely, there will be two bricks in series (vertical stacks), and seven or eight in parallel (horizontal stacks) creating a matrix of devices, with probably 64 devices. The finished matrix should handle 24kW conservatively.

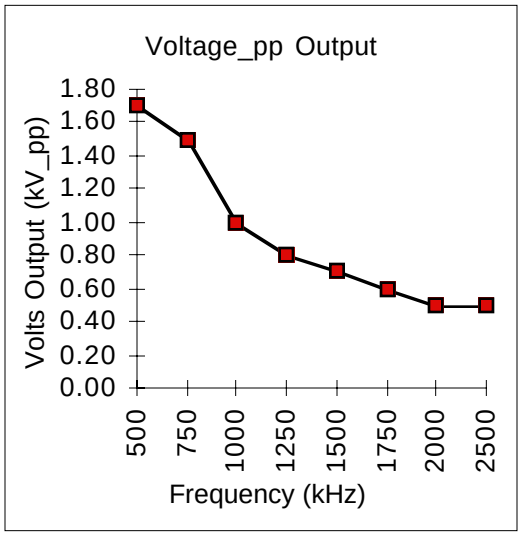

Figure 5: Modulator output in Volts peak to peak with a sinusoidal input wave, plotted as a function of frequency

5 CONCLUSIONS

The bandwidth linearity is a small problem compared to the overall proof of capability of the series MOSFET circuit architecture. The peak-to-peak output is more than 2.2 times the maximum operating voltage of a single MOSFET, and thus they are truly operating in series as linear amplifiers. As a stopgap measure, a tetrode tube amplifier was constructed [2]. Implementation of the solid state modulator is expected in Jun. '99. Since the MOSFETs are a relatively new technology as compared to vacuum tubes, it seems that the more reliable, cheaper technology is long overdue as a replacement for comparable vacuum tube technology. It is hoped that this research will help initiate the shift from vacuum tube reliance to solid state for high voltage, high power RF electronics.

5 REFERENCES

[1] V. Shiltsev, *et.al.*, "Compensation of Beam-Beam Effects in the Tevatron with Electron Beams", FNAL-Pub-98/260 (1998)

[2] V. Shiltsev, *et.al.*, "Prototype "Electron Lens" Set-up for the Tevatron Beam-Beam Compensation", these proceedings

[3] E. Ginzton, *et.al.*, "Distributed Amplification", Proceedings of the IRE, (1948)

[4] Intech, "PA5K-30LC Hardware Technical Manual MN161786", Lambda RF Systems (1994)

[5] http://dirnrg.com/Products/specs/deseries.htm