FERMILAB-CONF-99-414-AD

SUPERCONDUCTING RF CAVITY R&D FOR A SEPARATED KAON BEAM AT FERMILAB

Reported by T. W. Koeth, Rutgers University

Abstract

Fermilab is considering the implementation of a high flu pure kaon beam in order to study rare $K^{\pm}$ decays and to produce K_0 beams for K_L-K_S interference experiments. The 22-25 GeV/c kaon beam is produced using an RF cavity beam separator scheme which rejects most of the more numerous pions and protons emitted from the production target. With a beam spill time of 1 sec out of 3 sec, superconducting cavities are preferred for providing the required transverse deflection Although the separator scheme is not a new idea, the technology involved with this program will push the envelope of RF superconductivity technology. Cavities operating at 3.9 GHz in the TM110 π mode are under evaluation. An R&D program to construct and test these cavities has been initiated. A goal of 5MV/m deflec tion has been chosen. Description of the superconducting RF R&D program and status will be given.

1 INTRODUCTION

The new Fermilab Main Injector will produce intense extracted proton beams of 120 GeV/c momentum for fi ed target experiments. Design intensity is 3×10^{13} per pulse at a 3 sec cycle time with a 1 sec extracted spill duration. A fraction of the beam (5×10^{12}) would be used to provide secondaries for a 22 – 25 GeV/c beam line with a yield of up to $\approx 2 \times 10^8$ kaons to the high energy physics experiments.

The kaons would be "separated" from the other secondaries (primarily pions and protons) by RF cavities operating in a transverse deflectio mode (TM110, π). The long spill time and 1/3 duty factor require that superconducting resonators be used. RF separated beams have been around for a long time[1] and a version using superconducting cavities was implemented at CERN in the 70's[2].

The separated beam principal is as follows. The primary proton beam strikes a thick target, and the emerging hadrons pass through a momentum selection stage, which in this case is a chicane. The particles then are primarily a mix of protons, pions, and kaons of the same momentum but with differing speeds. Speed selection is accomplished by two RF stations that are designed to provide transverse deflection The distance between the stations, resonator frequency, and the relative phase of the RF are selected so that kaons will be transmitted to the users, while pions and protons will be rejected. The transverse optics between the two RF stations is set to provide ±I. Thus the deflectio of the beam particles emerging from the second RF station will depend on: the phase at which the particles enter the firs station, the relative phase of the two stations, the RF frequency (f), the distance between the stations (L), and the speed of the particles (β) relative to c. It is possible to choose a particular fL product such that for a specifi β, a "closed" beam bump is produced so that there is no resultant deflectio after the second station independent of the particle arrival phase at the firs RF station. Particles of other velocities will arrive at a different time at the second station so the resultant bump will not be closed and they will have a net deflectio dependent upon their arrival phase relative to the firs station. Thus if the RF deflec tion takes place all in one plane (h or v), the result will be that one particle species will have no resultant kick whereas others will be swept into a fan. If circular polarized RF deflectio is used (say by each station having horizontal and vertical deflectio 90 degrees out of phase) then one species again has no deflectio and other species will exit in a cone about this central trajectory. The cone angle will be dependent on the relative β of these other species.

For deflectio in one plane, kaons are produced in a fan and the unwanted protons and pions are directed straight ahead into a stopper plug. In the case of conical deflec tion, the station to station RF phase is chosen so kaons are undeflecte and the protons-pions would be stopped in a collimator with a hole.

Because of the relatively short charged kaon life time, 12 ns in its rest frame, it is desirable to keep the beam line short. At energies of interest the pion speed is very close to light and the difference in time delay from the firs station to the second between the pion and a K or p can be written

$$\Delta t = (\Phi/2\pi)/f = L/(2c\gamma^2)$$

or

$$fL = 2c\gamma^2(\Phi/2\pi),$$

where Φ is the relative RF phase delay.

If a frequency-distance product, fL, is selected so the the proton arrives at the second station 2π after the pion the the kaon will be at a phase delay of about $\pi/2$. This is a result of the circumstance that the mass of the kaon is about half that of the proton. We have chosen an RF frequency of 3.9GHz as the upper limit to be acceptable from the point of surface resistivity, thermal conductivity and experience with superconducting cavities. This leads to a station to station distance of 107 m for a 25 GeV/c kaon beam. The overall beam line is of order 350 m.

The desired energy range of 22–25 GeV/c can be accommodated in a one plane deflectio situation by interposition of another deflectio station between the two mentioned above. For two plane deflection the two stations are suffi cient. At this writing, it is not necessary to select between these alternatives.

Operated by Fermi Research Alliance, LLC under Contract No. DE-AC02-07CH11359 with the United States Department of Energy.

2 R&D PROGRAM

This material is extracted from the design study for the superconducting aspects of an RF separated kaon beam at Fermilab[3]. The parameters and specification chosen for the purpose of a point design are listed in Tab. 1. Definitions and field patterns may be found in the design study, or in Padamsee *et al*[4] in their discussion of crab cavity development at CESR.

Table 1: Provisional parameters for initiation of the R&D program and for the point design outlined in this report

frequency	3.9 GHz
mode	π, TM110
equator diameter	94 mm
iris diameter	30 mm
cell length	38.4 mm
cells per meter	26
cells per cavity	13
(R/Q)′	55 ohm/cell
(r/Q)′	1430 ohm/m
V_{trans} @ 0.1 T	5.7 MV/m
E_{peak}	22 MV/m
B_{peak}	0.100 T
U (stored energy)	0.92 J/m
coupling factor	0.051
$G_1 = Q \times R_{sur}$	236 ohms
R_{sur} @ 2K, T_c/T=4.6	$1.04 \times 10^{-7}\Omega$
Q @ R_{sur}	2.2×10^9
Power dissipated @ 5.7MV/m, 2K	10 watts/m
System Requirements for 60 MV/m total kick	
Total cryogenic power	95 watts @ 1.8K 230 watts @ 2K
Q_L (loaded Q)	6×10^7
RF power @ 5.7 MV/m	380 watts/m
RF power including factor of 2 for regulation	760 watts/m
Total RF power	8 kilowatts

A 3.9 GHz structure operating in π-mode and scaled from the TESLA shape has been adopted in order to initiate the R&D program. The cavity shape is shown in Fig. 1. Fig. 2 illustrates a 13 cell cavity in a helium vessel, and Fig. 3 shows a concept for a cryomodule containing two cavities.

The 13 cell cavity has 1/2 meter active length, and an overall length of 0.7 m. The length has been selected in order to limit the number of cells per structure to what is expected to be a manageable number for tuning, field flatness, and mode frequency separation. The equator and iris diameters are 94.4 mm and 30 mm respectively. The cavity would be polarized either by deforming a finished azimuthally symmetric cavity, or by using slightly elliptical dies.

There are two beam pipe flanges and four coupler flanges

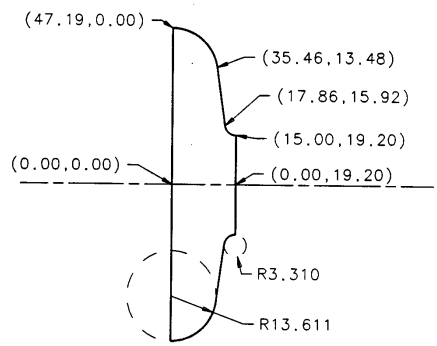

Figure 1: Half-cell

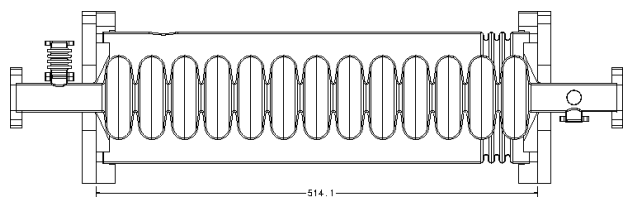

Figure 2: Conceptual drawing of cavity in demountable helium vessel.

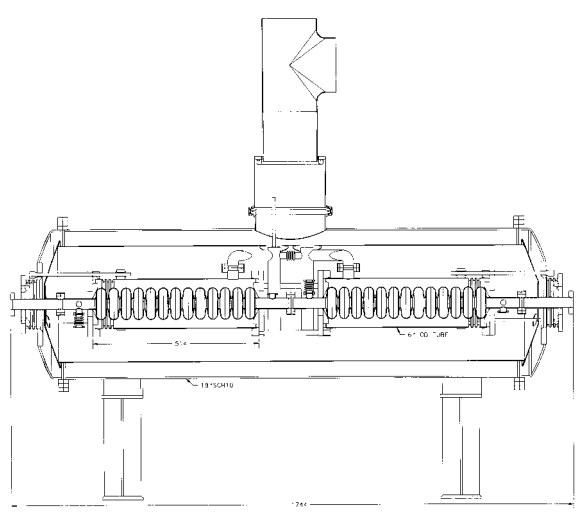

Figure 3: Cryostat module with two cavities.

which must seal the cavity vacuum. One of the coupler flange would be for the input RF power. The others are for monitor and (fundamental or HOM) power extraction. Beam pipe and coupler flange are of a size comparable with CF35 and mini-confla respectively.

The flang arrangement shown in Fig. 2 would allow for a demountable helium vessel. End flange of NbTi would be welded on the cavity end pipes. The rest of the vessel would consist of end caps and a cylindrical spool of titanium preferably (or of 316L, 316LN stainless). As shown this arrangement would allow for easy testing of different length cavities and a bellows section would accommodate tuning adjustment and thermal contraction. The vacuum seals here could be helico–fl x as they are not associated with the cavity surface. Those associated with the cavity would be solid aluminum rings as in the TESLA Test Facility.

The π-mode has been selected, at least for the initial study. Other cavity modes such as $\pi/2$ or $2\pi/3$ have been suggested because of their more favorable location on the dispersion curve and consequently their lower sensitivity to tuning and frequency errors, and the possibility of longer structures with more cells which clearly would be an advantage. Further work will need to be done to justify the choice of cavity mode. However the greatest experience lies with the π-mode and it minimizes the number of cells per meter and consequently the number of welds. Some investigation of cavity shape has been made. Perhaps more investigation is necessary; however multipacting is probably the key criterion and actual test results are needed.

The choice of operating gradient or transverse kick of 5.7 MV/m per meter has been made by requiring that the maximum surface B fiel on the cavity (near the iris) not exceed 0.1 Tesla. This can be compared with a peak of 0.105 Tesla at 25 MV/m for the TESLA 1.3 GHz accelerating mode cavities. (The theoretical limit is $\approx 0.2-0.24$ T.) It is interesting to note that TESLA cavity gradients are not only limited by B fiel quenches but also by fiel emission. In the transverse mode it may be possible to reach higher peak B because of the reduced ratio of peak electric to peak magnetic field It will be interesting to compare maximum gradient limitations in transverse and accelerating modes . At this stage, the figur of 5.7 perhaps is better characterized as a goal rather than a choice.

In order to size the cryosystem which might be needed for the separators we have assumed a budget of about 20 watts/m and 10 meters of RF. Also we have assumed an operating duty factor of one second in three (DF=1/3) and an overall contingency of a factor of 3, so that these two terms cancel resulting in a cryosystem size requirement of $\approx$200 watt. We realize that this requirement has a somewhat arbitrary justification Also we note that if higher gradients can be achieved the RF losses will increase.

The RF power requirement depends on the loaded Q; our present choice of Q_L is 6×10^7 – a factor of 20–40 less than Q_0. This would lead to an RF power requirement of 400 watts/m, or total power of 4 kW. 200-400 watts is well within the range of TWT's though other sources may be more economical. The bandwidth (f/Q) at this Q_L is only 50 Hz, which may present a problem in terms of microphonics and RF phase/amplitude control. Lower Q_L's will need more RF power on resonance but may actually use less if microphonics and resonance frequency control lead to an f_0 spread larger than the bandwidth. We note that Darmstadt operates with a Q_L of 3×10^7 at 3 GHz.

3 STATUS AND OUTLOOK

One and two cell resonators of copper and niobium have been fabricated using deep-drawing. The copper models were used for verificatio of URMEL predictions; the niobium cells are currently being used for ebeam welding studies.

A goal of this firs year of the R&D activity is cold testing of one and two cell niobium models. For this purpose, some of the necessary infrastructure is in place (e.g., clean rooms, ultra-pure water); a high pressure rinsing system is undergoing assembly as is a vertical test dewar. The principal facilities not available on-site are ebeam welding and a high temperature oven; industrial or other-laboratory sources will be used. Concurrently, design of 5 cell models and 13 cell prototypes is underway.

Although this effort was undertaken within the context of the fi ed target program for the Fermilab Main Injector, there are other potential applications for high-duty factor resonators operating in a deflectin mode. Use as a crab cavity has already been cited above[4]. For the separated beam, a range of frequency choices is possible; the particular figur of 3.9GHz was motivated by the convenience for cavity tests with beam in the 1.3GHz photoinjector laboratory at Fermilab. Deflectin cavities may also be used as beam splitters and bunch pickers. For instance, a 3.25GHz deflectio station would kick alternate bunches from a 1.3GHz linac into different beamlines.

4 REFERENCES

[1] H. Hahn and H. Halama, Rev. Sci. Inst., **36**. 1094 (1965)

[2] A. Citron, G. Dammertz, M. Grundner, L. Husson, R. Lehm, and H. Lengeler, "The Karlsruhe-CERN RF Separator", Kernforschungszentrum Karlruhe, Institut für Kernphysik Primary Report IK-Nr. 316/78 (unpublished) 1978

[3] R. N. Coleman, J. E. Dey, D. A. Edwards, H. T. Edwards, M. H. Foley, J. D. Fuerst, W. H. Hartung, J. Doornbos, T. R. Kobilarcik, K. P. O. Koepke, T. W. Koeth, M. Kuchnir, M. S. McAshan, Y. Terechkine, G. B. Thomson, H. B. White, "An RF Separated Kaon Beam from the Main Injector: Superconducting Aspects", Fermilab Technical Memorandum TM-2060, October 19, 1998

[4] H. Padamsee, P. Barnes, C. Chen, J. Kirchgessner, D. Moffat, D. Rubin, Y. Samed, J. Sears, and Q. Shu, Proc. IEEE Particle Accelerator Conference, San Francisco, May 1991, p. 2426