PERFORMANCE AND CONTROL OF A CRYOGENIC SYSTEM COOLING 1152 VLPC CHANNELS

T. H. Gasteyer and P. D. Wheelwright

Fermi National Accelerator Laboratory *
Particle Physics Division
Batavia, IL, 60510, USA

ABSTRACT

A liquid helium supplied cryogenic system has been designed, built, and operated continuously since September 1996. The system cools nine cassettes (128 channels each) of visible light photon counter (VLPC) chips to 6.5 K. Thermal stability of the chips has been excellent. Liquid helium is supplied from a modified CTI 1400 helium liquifier. The liquid flows into a vacuum insulated liquid nitrogen shielded cryostat where it cools the VLPC chips. Some of the helium boil off is used to reduce the cryostat heat leak. All boil off gas is returned to the compressor suction header for the Tevatron. The exceptional control of the cassette temperatures is achieved with two levels of PID control. The coarse control (All cassettes within 0.5 K) is reached by maintaining constant cryostat liquid level, cryostat pressure, and heat intercept flow. The fine control (All cassettes within +/- 0.010 K) is achieved with automatically controlled heaters in each cassette. The operating temperature range for the chips can be set anywhere between 5 to 15 K. The cryostat heat leak is about 2.0 W at 6.5 K.

INTRODUCTION

Visible light photon counters are an emerging type of electro-optic sensor used in a high-energy physics particle detector called a scintillating fiber tracker. During particle collisions a large amount of sub atomic particles are generated. The scintillating fiber tracker is a tool for measuring the trajectory of these sub atomic particles. The VLPCs read the optical signals from the fiber tracker and convert them into electrical signals that are read into the data acquisition system. The trajectories are then computed from this data. Fermilab experiment E835 has implemented a small size detector of this type. The VLPCs are designed to operate at one specific temperature (6.5 K). Deviations from this nominal operating temperature point are undesirable since they affect the gain, efficiency,

* Work supported by the U.S. Department of Energy under contract No. DE-AC02-76CH03000

and noise rate in the VLPCs. It is therefore desired to minimize these temperature deviations. This paper discusses the liquid helium supplied cryostat designed to cool the devices to their operating temperature, the control system for achieving the desired level of temperature control, and the resulting control system performance.

CRYOGENIC SYSTEM DESIGN

A closed cycle liquid helium refrigeration system has been developed for the purpose of cooling cassettes containing VLPCs to a temperature of 6.5 K. The system is comprised of a compressed pure helium supply at 2.0 MPa (290 Psia), a CTI 1400 helium liquefier, a 450 L storage dewar, vacuum jacketed transfer line, a phase separator, a cryostat for cooling the sensors, and a suction header for returning helium to the compressor system (See figure 1). Our system is tied into the main accelerator (Tevatron) helium system. This provides us with a source of high-pressure helium and a place to return the helium exhaust from our system. We simply liquefy the compressed helium with a CTI 1400, use it, and return it. Since the experiment this device is used on will run for more than one year we have added a 450 L storage dewar to increase the long term system reliability. This provides us with a backup liquid helium supply that will last for several days. The storage dewar has been used when the Tevatron high pressure helium system is off for maintenance, during power outages, and during CTI 1400 engine maintenance. It has reduced the number thermal cycles on the cryostat and the experimental down time. To lower the heat leak into the liquid helium, liquid nitrogen cooled shields are used throughout the system in the vacuum space. Control of the liquid level in the cryostat is of critical importance to control of the VLPC temperatures. Since there are about 35 meters of transfer line in-between the 450-L storage dewar and the cryostat we have added a phase separator directly upstream of the liquid helium inlet valve. This provides essentially a 100% liquid inlet condition to the control valve. By doing this, the sizing of the control valve can be done more accurately and the LHe level

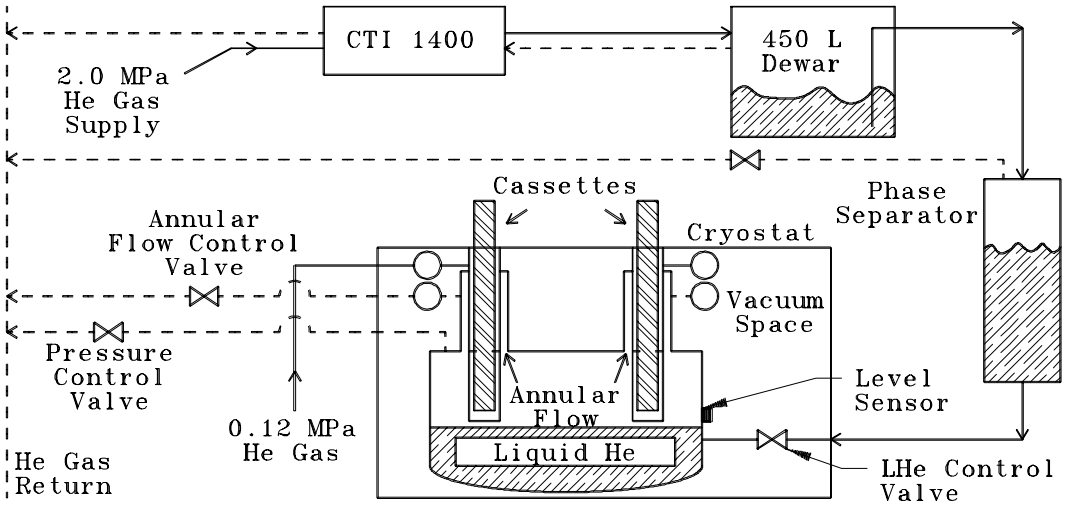

Figure 1. System Schematic

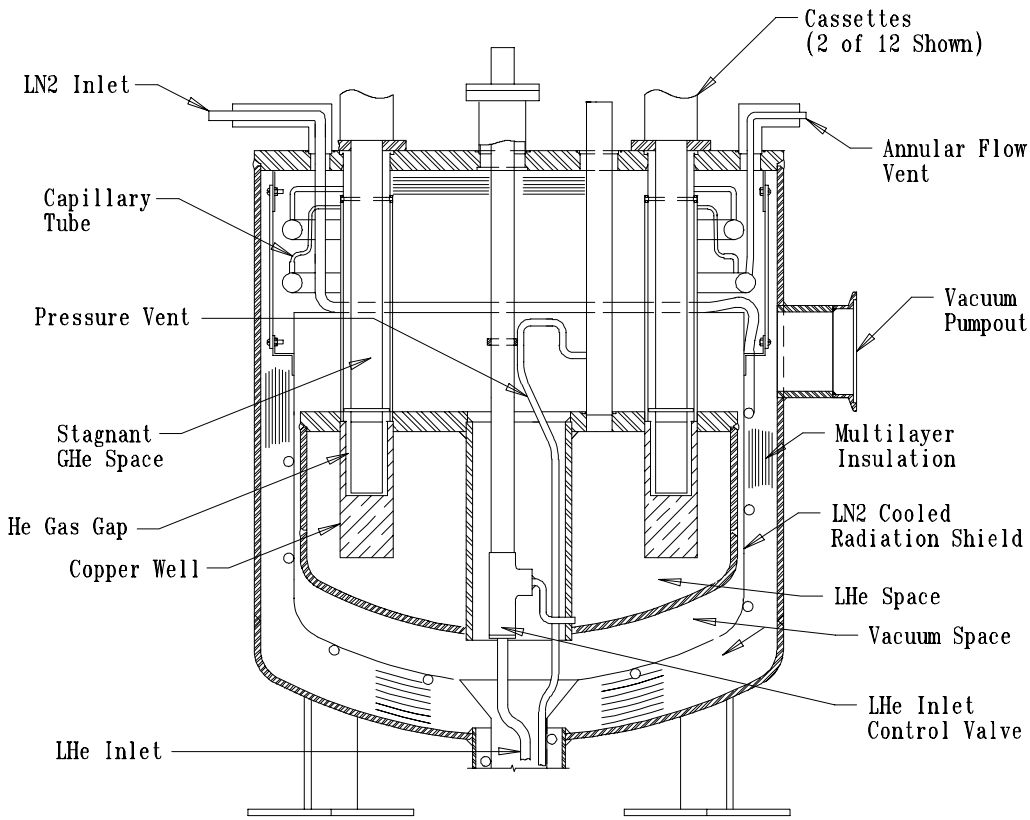

Figure 2. E835 VLPC Cryostat

stability is better because the control system does not have to fight changing inlet conditions which are flow rate and heat leak dependent. The LHe flows through the cryostat and is boiled off. This boil off is warmed up and flows through two control valves back into the Tevatron helium gas return.

The cryostat (See figure 2) contains a series of copper wells that hermetically seal the liquid helium space from the stagnant gas helium space inside the cassette volume. The liquid helium is controlled to a level just at the bottom of these wells. It cools them to roughly the saturation temperature of the liquid helium. On the inside of the well there is a hollow space which the cassette plugs into. The liquid helium inlet control valve establishes the level of liquid helium to a constant value. Boil off from the cryostat flows out two paths. There is a pressure vent whose flow rate is adjusted to maintain a constant pressure in the cryostat. And there is an annular flow vent whose purpose is to reduce the heat leak to the liquid helium by cooling the tubes that connect the vacuum vessel to the

Table 1. Cryostat and Cassette Thermal Specification

	Specification	Actual
Cryostat heat leak	5 W	2 W
Nominal VLPC operating temperature	6.5 +/- 0.050 K	6.5 +/- 0.010K
VLPC operating temperature range	5 to 15 K	5 to 15 K

liquid helium vessel. These tubes are of double wall construction and the cold gas flows through the annular space between the tubes. The cryostat contains penetrations for twelve cassettes (Only 9 are currently used). The parallel gas outlets of the annular tubes are connected into a manifold with 3.2-mm (1/8 in.) capillary tubing. The purpose of this is to insure even flow distribution from tube to tube. Both the pressure vent and annular vent flows are then warmed to room temperature and go through mass flow control valves. (Figure 1.) Since we have a closed cycle system contamination is very important and must be maintained at a low level (Less then 1-PPM nitrogen). To monitor the contamination level, part of the helium exhaust flow goes through an arc cell that measures the PPM level of nitrogen in the return gas. The cassettes themselves are not hermetic and can introduce contamination into the stagnant gas space. This is the main reason the gas helium inside this space is separate from the liquid helium. The helium in the stagnant gas space is only there to provide a uniform heat transfer medium with the proper thermal resistance so that the VLPCs will operate close to their nominal operating temperature. Table 1 displays a list of the basic thermal specifications for the cryostat and VLPC temperature control.

One of the design obstacles to overcome in controlling nine different cassettes at the same temperature is to make sure that the thermal conductance from the cassette cold end to the copper well is consistent and repeatable. Conduction type contact joints at cryogenic temperatures can be problematic and were not used in the current cassette design. The solution was to use a thermal conduction gas gap[1]. The heat dissipation through the cold end is relatively small (Approximately 0.1 W). This heat is transferred across the annular helium gap (Between the cassette cold end and the copper well in the cryostat) by conduction and natural convection. The required gap size is on the order of 1 mm. This type of joint allows for cassette thermal contraction, is easy to fit, and provides a relatively consistent thermal joint from cassette to cassette. The cassettes themselves are not made to a high degree of accuracy and the are significant variations from cassette to cassette. If the cassette is bent when inserted into the cryostat it will touch the side of the copper well. This not a catastrophic event but will cause this particular cassette to run colder.

CRYOSTAT CONTROL SYSTEM DESIGN

Accurate and repeatable control of the VLPC temperatures is accomplished through good thermal and mechanical design of the cryostat and the implementation of a stable control system. The basic control system diagram is shown in figure 3. A description of each of the control loops in the system is provides in table 2. Since the VLPC devices

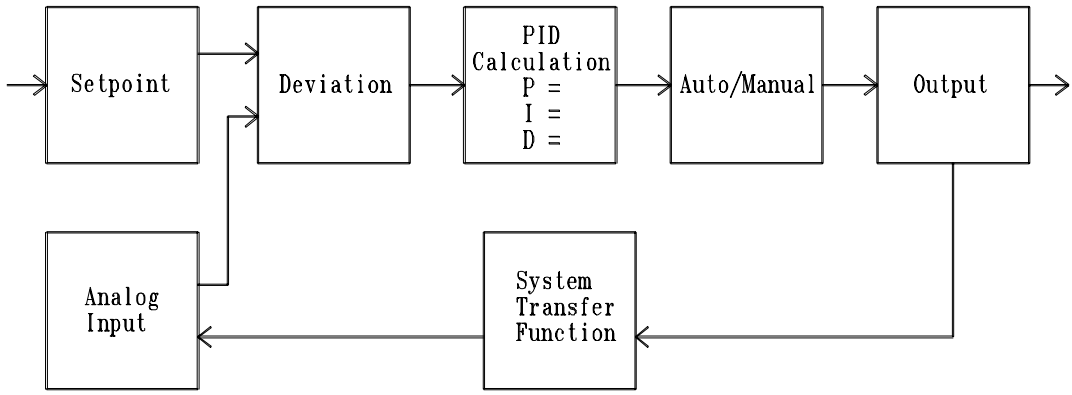

Figure 3. E835 VLPC Cryostat Control System Schematic

generate only a minuscule amount of heat and this heat is roughly constant if we can establish a stable cryostat liquid level, pressure, and annular flow rate then the VLPC temperatures should be stable. In general there are two layers of control used to establish temperature control of the VLPCs.

The first layer consists of the three control loops that control the inlet liquid flow and outlet gas flow of helium through the cryostat. The first loop controls liquid helium level. This is controlled by a pneumatically actuated control valve (Cv = 0.32) which looks at a temperature sensor on the wall of the cryostat or a liquid level probe. We found that the temperature sensor on the outside of the cryostat was able to control the level better with a lower heat leak than a level probe. As the liquid level in the cryostat rises, this sensor reads a lower temperature. The sensor used is an Allen Bradley 100-ohm carbon resistor. At the control set point (Approximately 6.8 K) this sensor has a sensitivity of about 100 ohms/K. It took a full PID digital control loop to get this loop to work well. This is due to the thermal time delay of the signal as the heat travels through the stainless steel wall of the cryostat.

The second loop controls the annular flow to be constant. A commercially available, low pressure drop, thermal mass flow meter/controller is used for this loop. The controller range is 0 to 30 standard liters per minute (SLPM) helium with an accuracy of +/- 1% of full scale. This is a self-contained control system. A constant DC voltage setpoint signal is sent to this device. The controller then tries to maintain a constant flow even when the upstream and downstream pressures are changing. The control circuitry in the flow controller proportionally opens or closes the valve so that the flow setpoint is achieved. The effect of this flow is to reduce the heat leak of the system from 42 W with no flow to about 2 W at the design annular flow. The constant nature of this flow is important to the overall control because it has a very strong effect on the cassette temperatures.

The third loop is for cryostat pressure. Its purpose is to maintain the cryostat pressure constant to avoid temperature changes induced by the effect of pressure on the saturation properties. A control loop which looks at the cryostat pressure and sends setpoint values to a mass flow controller is used to regulate the vent flow out of the cryostat. The type of mass flow controller used on this loop is the same as the controller used on the annular flow but the range is 0 to 80 SLPM helium. The boil off gas in both the vents is warmed up and passes through about 35 meters of tubing before reaching the flow controllers. Since the cryostat pressure is roughly 0.136 MPa (5 psig) and the vent pressure is usually

Table 2. Control System Loop Descriptions

Loop	Setpoint	Input	Control Type	Auto/Manual	Output
LHe Level	Temperature	Cryostat Wall Temperature	PID	Auto	LHe Inlet Valve Position
Annular Flow	Mass Flow rate	Annular Flow	NA	Manual	Setpoint to Flow Control Valve
Cryostat Pressure	Pressure	Cryostat Pressure	PI	Auto	Setpoint to Flow Control Valve
Cassette Temperature	Temperature	VLPC Temperature	PI	Auto	Current to Cassette Heater

about 0.115 MPa (2 psig) these controllers have to operate some times with as little as 0.007 MPa (1 psi) pressure drop due to line pressure drops. The purpose of all three of the loops is to achieve VLPC temperatures on all cassettes within 0.5 K.

The second layer of control consists of loops for trimming all the cassette isotherms to the same temperature. One hundred and twenty eight VLPCs are mounted on a highly conductive copper piece suspended in the bottom of each cassette. This piece is referred to as the copper isotherm. Each isotherm has two calibrated temperature sensors and a heater imbedded into it. A simple PI control loop for each isotherm then adjusts the heater output to maintain a constant isotherm temperature. With the heater on 100 percent the isotherm temp is raised about 0.5 K. The temperature set point of all the cassettes are set to the same value. The control circuit then adjusts the heater current from 0 to 20 mA to achieve the setpoint temperature. The sensors are driven by a 30 micro amp constant current source. The voltage across each isotherm sensor is then read into the control system with a temperature resolution of about 3.9 mK.

Since there are several loops that control parameters which affect the VLPC temperatures it is necessary to insure that there are no instabilities caused by loop to loop interactions. Specifically, the two loops which control the liquid helium level and the cryostat pressure must not interact. The philosophy used to prevent loop to loop interaction is to have the two loops have very different time response. (One slow and one fast) For our present case the fast loop controls the liquid level and the slow loop control cryostat pressure.

CONTROL SYSTEM PERFORMANCE

Over the last 11 months the temperature stability of the VLPC chips has been excellent. Due to the large quantity of data recorded the figures shown in this section are during the first four days in May and are considered to be typical of control during the entire run. A temperature versus time plot of the VLPC temperatures is shown in figure 4. This plot shows the VLPC temperatures in a single cassettes. One of the effects of being tied to the Tevatron helium system is that there are minor temperature upsets during magnet quenches. The suction pressure will rise from its normal value of 0.115 MPa (2 psig) to about 0.136 MPa (5 psig) or more. This causes the annular flow to stall and the cassettes begin to warm over their set point. Typically the maximum temperature rise is on the order of 30 to 40 mK (See temperature spikes in figure 4). This is within the

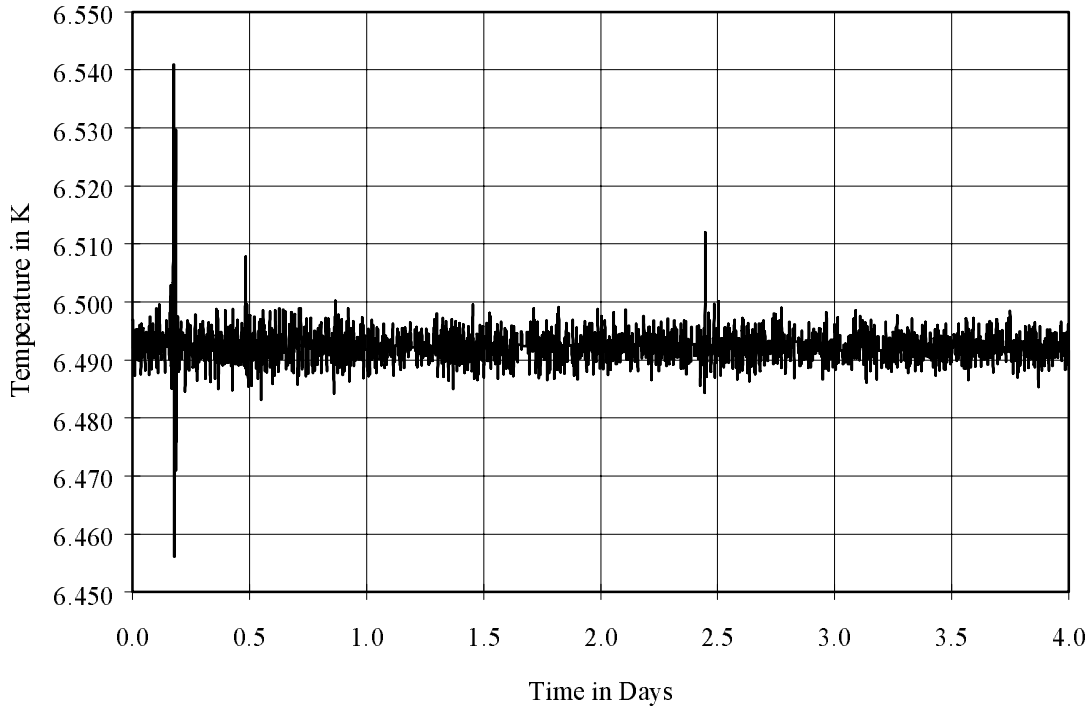

Figure 4. VLPC Temperature Stability During the First Four Days in May

allowable for the VLPCs. To get a better idea of how well the temperatures were controlled I have analyzed the data from four cassettes for the entire month of May using statistical analysis. During this period there were about 33500 data points taken per cassette and 15 quenches. The results of this analysis are shown in table 3. The stability of the level (Figure 5) and pressure (Figure 6) in the cryostat was also excellent. In addition to having very stable temperatures the cryostat also has a low heat leak to liquid helium. The total cryostat heat leak is measured to be approximately 2.0 W. This data comes from the boil off flow rate measured by the mass flow controllers. For the most part tuning of the control loops was accomplished with ease. All the loops were tuned using a trial and

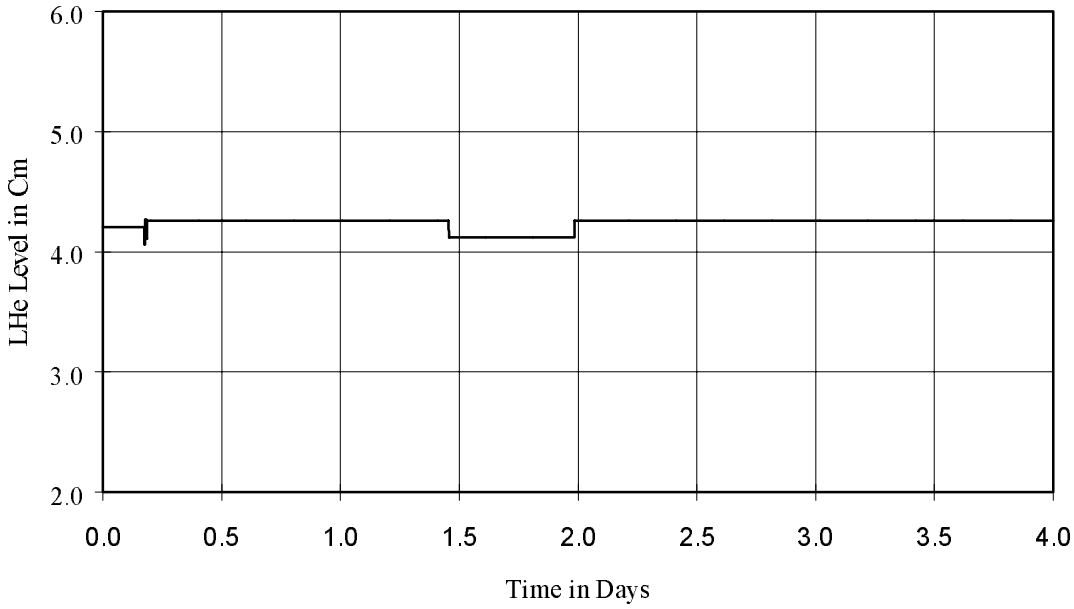

Figure 5. Typical Cryostat Level Stability During the First Four Days in May

Table 3. VLPC Temperature Control Results for May

	Cassette 1	Cassette 2	Cassette 3	Cassette 4
Control Setpoint	6.492 K	6.492 K	6.492 K	6.492 K
Average of Temperature	6.4923 K	6.4923 K	6.4922 K	6.4923 K
Standard Deviation of Temperature with Quenches	0.0034 K	0.0025 K	0.0038 K	0.0046 K
Standard Deviation of Temperature without Quenches	0.0025 K	0.0020 K	0.0020 K	0.0035 K

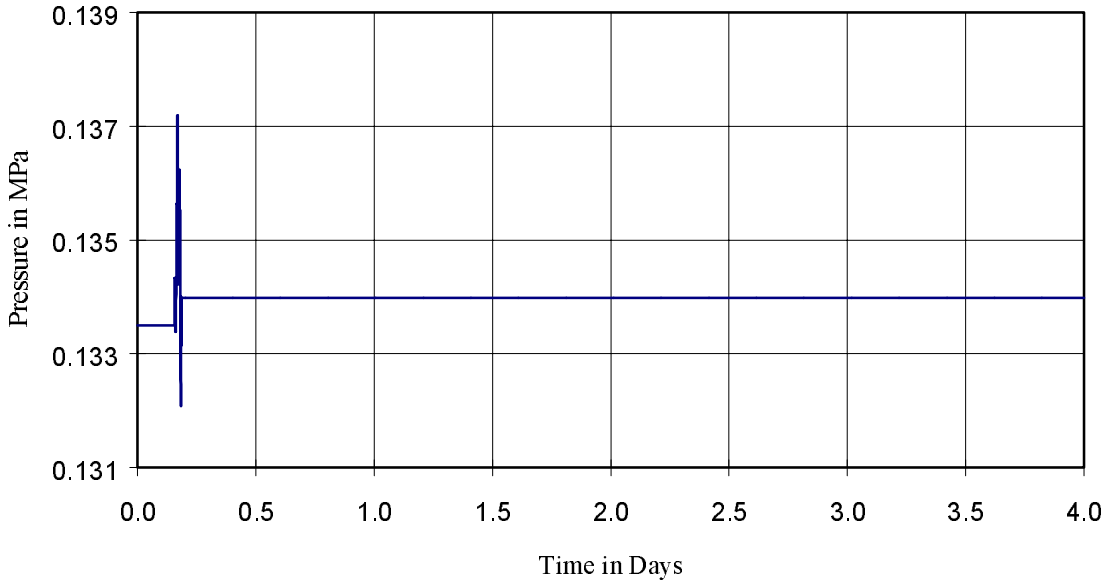

Figure 6. Typical Cryostat Pressure Stability During the First Four Days in May

error method. In general the proportional gain was increased to a value below the point where system oscillation occurred. The integral gain was then increased until an acceptable offset was achieved.

CONCLUSIONS

We have designed, fabricated, and tested a low heat leak cryostat for cooling a multitude of devices very accurately for long periods of time. The cryostat cools 1152 VLPCs to a temperature of 6.492 K +/- 0.010 K except during system upsets which happen infrequently. It has a total heat leak to liquid helium of approximately 2.0 W and has been operating for 11 months. The VLPCs have been controlled at up to 15.0 K by adjusting cryostat parameters (Liquid helium level, cassette insertion depth, cryostat pressure) and could be run at even higher temperatures.

REFERENCES

1. T. H. Gasteyer, K. J. Krempetz, A. Lee, R. A. Rucinski, and A. M. Stefanik. "Advances in Cryogenic Engineering", Vol. 39A, pg. 619, Plenum Press, New York, 1994