Fermi National Accelerator Laboratory

FERMILAB-Conf-97/198

Proposal for an Aluminum Beam Screen in the LHC

W. Chou

Fermi National Accelerator Laboratory
P.O. Box 500, Batavia, Illinois 60510

H. Ishimaru

KEK
Tsukuba, Japan

June 1997

Published Proceedings of the *1997 Particle Accelerator Conference PAC 97*,
Vancouver, Canada, May 12-16, 1997

Operated by Universities Research Association Inc. under Contract No. DE-AC02-76CH03000 with the United States Department of Energy

Disclaimer

This report was prepared as an account of work sponsored by an agency of the United States Government. Neither the United States Government nor any agency thereof, nor any of their employees, makes any warranty, expressed or implied, or assumes any legal liability or responsibility for the accuracy, completeness, or usefulness of any information, apparatus, product, or process disclosed, or represents that its use would not infringe privately owned rights. Reference herein to any specific commercial product, process, or service by trade name, trademark, manufacturer, or otherwise, does not necessarily constitute or imply its endorsement, recommendation, or favoring by the United States Government or any agency thereof. The views and opinions of authors expressed herein do not necessarily state or reflect those of the United States Government or any agency thereof.

Distribution

Approved for public release; further dissemination unlimited.

PROPOSAL FOR AN ALUMINUM BEAM SCREEN IN THE LHC

W. Chou, Fermilab,* P.O. Box 500, Batavia, IL 60510, USA
H. Ishimaru, KEK, Tsukuba, Japan

Abstract

This paper proposes a cold beam screen made of high strength, high electrical resistivity aluminum alloy (such as A7N01) as an alternative to the present LHC design that is based on a copper co-laminated high Mn content stainless steel. The main advantages of an aluminum screen are: simple manufacturing processes, low cost, elimination of millions of small slots and of TEM waves, no adhesion problem, no helium leak problem (vacuum tight), non-magnetic, and others. The available aperture is equivalent to the present design when a non-uniform wall thickness is adopted. A prototype was built to demonstrate the design and the end connections. Concerns about the multipactoring, electron cloud instability, surface resistance and cryopumping using anodized aluminum will be addressed.

I. INTRODUCTION

The present design of the beam screen in the LHC uses a copper co-laminated high Mn content stainless steel. Ref. [1] proposes an alternative candidate, namely, the high strength, high resistivity aluminum alloy, such as A7N01 or 7039-T61. (Note: The *high* resistivity is relative to pure aluminum and other aluminum alloys.) This paper revisits this proposal and gives some details in engineering design.

Table 1 is a comparison of the electrical resistivity and the yield tensile strength of copper (Cu), aluminum alloy (A7N01) and stainless steel (SS) at 4 K. It is seen that A7N01 has lower resistivity than SS and higher strength than Cu. It has been shown in [1] that a 1.5-mm thick A7N01 tube is mechanically stable during quench and its effect on beam instability can be under control.

Table 1. Electrical Resistivity and Yield Tensile Strength at 4 K

Material	Electrical Resistivity (Ωm)	Yield Tensile Strength (MPa)
Cu	5×10^{-10}	44
A7N01	1.8×10^{-8}	520
SS	5×10^{-7}	1500

A preliminary sketch of the cross section of an aluminum beam screen is shown in Figure 1. It consists of a 1.5-mm thick aluminum pipe that contains two 3.7-mm diameter cooling holes, four 2-mm wide long slots and four mini-antechambers, which house the cryopump (such as anodized aluminum foils).

*Operated by Universities Research Association Inc. under Contract No. DE-AC02-76CH03000 with the U.S. Department of Energy.

II. ADVANTAGES OF AN ALUMINUM SCREEN

A. Good extrusion characteristics

One may thus design a complex cross section as shown in Fig. 1. This would simplify the manufacturing process and provide higher reliability and easier quality control.

B. Low cost

A detailed break-down of the cost estimate has been carried out by the industry. The total (including overhead and contingency) is about 25 MCHF, which is lower than the projected cost of the copper-stainless steel design.

C. Elimination of beam-induced rf fields outside the screen

The beam-induced rf fields in Fig. 1 would be confined inside the beam screen. Therefore, there will be no TEM waves between the screen and cold bore.

D. Replacing millions of pumping slots by a few long ones

This would considerably reduce the machine impedance and simplify the manufacturing process.

E. No adhesion problem

There is no prior experience with the adherence of the copper to the stainless steel in a 30-year lifetime. This would no longer be a worry when a single-layer aluminum tube is used.

F. Non-magnetic

In order to minimize the magnetic susceptibility in a welded stainless steel pipe, special material (such as the high N_2 - high Mn steel) is needed. The aluminum alloy does not have this problem.

G. Vacuum tight

The aluminum beam screen system could be made vacuum tight provided that the bellows connections between the screens are vacuum tight. Any helium leak from the cooling tubes would not get into the beam vacuum.

III. INTER-CONNECTION DESIGN

Figure 2 shows an engineering drawing of the interconnection part. In order to absorb the differential thermal contraction between aluminum and stainless steel, the cooling tubes make several spirals before leaving the beam screen. The number of welding points is minimized. The installation procedure is simple. A prototype has been made for demonstration purpose.

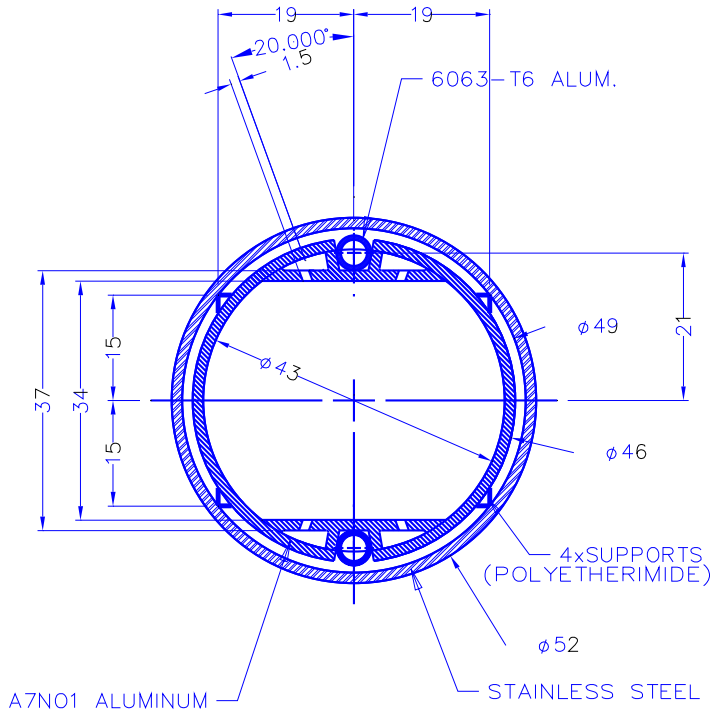

Figure. 1. The cross section of an aluminum beam screen.

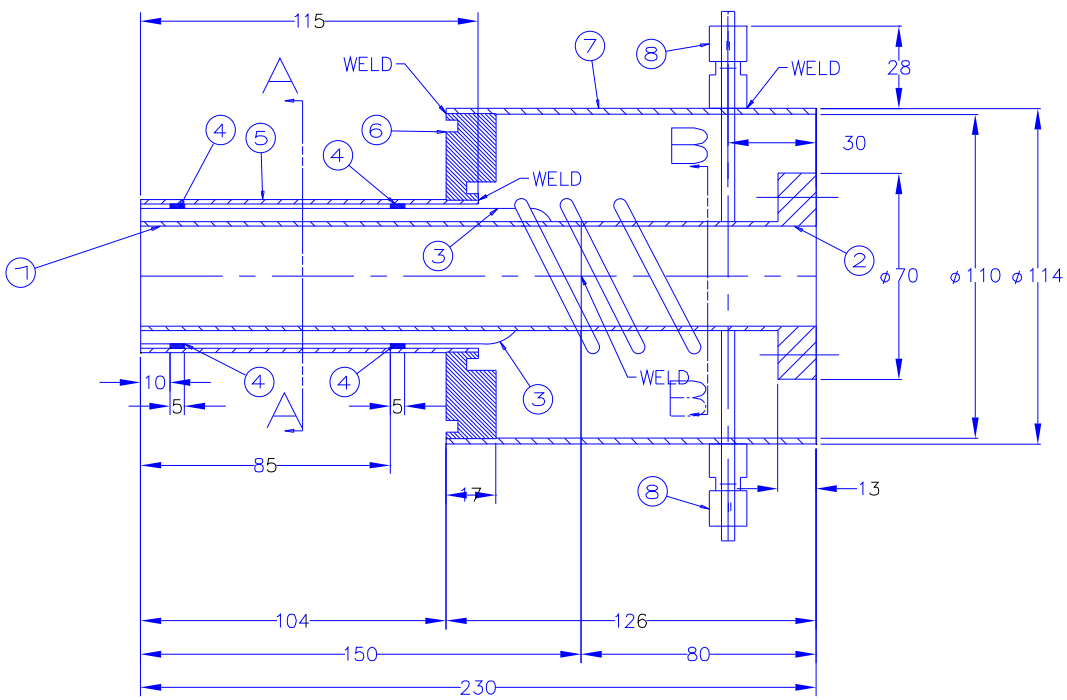

Figure. 2. The inter-connection part of an aluminum beam screen.

IV. CONCERNS ABOUT AN ALUMINUM SCREEN

A. Aperture

During quench, $B\dot{B} = 300$ T^2/s. The required thickness of aluminum screen is 1.5 mm. Compared with the present LHC beam screen which uses a 1 mm thick stainless steel tube, there could be an aperture loss of about 1 mm. However, it is known from beam collimation studies that the most critical part of the aperture limit is along the diagonal line.[2] Fortunately, the stress in the wall in

this direction is small. Therefore, one may adopt a non-uniform wall thickness to reduce it from 1.5 mm to 1 mm near the diagonal region as shown in Figure 3. Thus, the usable physical aperture of an aluminum screen is equivalent to a stainless steel one.

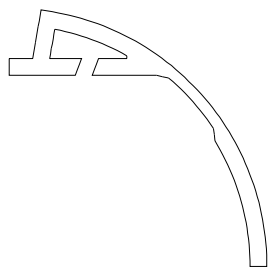

Figure. 3. A quadrant of a beam screen with non-uniform wall thickness.

B. Surface resistance

At low frequencies, the concern is about the resistive wall instability. A 1.5-mm thick aluminum beam screen would give a growth time of about 11 ms. But this can easily be damped by a transverse feedback system.

At high frequencies, the concern is about the beam heating. Because of the anomalous skin effect[3], it is not clear if A7N01 is any worse than copper. A measurement program has been established at CERN and data will be made available soon.[4]

C. Photoelectrons

Photoelectrons may cause two types of problems: multipactoring and electron cloud instability. Because aluminum has higher secondary electron yield than stainless steel or copper, this is a genuine concern. A solution is to apply a thin (tens of nm) titanium-nitride (TiN) coating on the aluminum surface, which LBL is working on for the LER beam pipe of the SLAC B-Factory.

D. Cryopumping at 20 K

M.G. Rao at CEBAF has demonstrated that anodized aluminum is a good cryopump for hydrogen and helium at 4.3 K. [5] However, it is not clear if its pumping speed and adsorption capacity for hydrogen at 20 K could meet the LHC requirement. Three anodized aluminum pipes will be shipped to CERN for this measurement.

V. ACKNOWLEDGEMENTS

The authors are thankful to O. Gröbner, R. Calder, A. Mathewson, A. Poncet, F. Caspers, F. Ruggiero, J. Gareyte, B. Zotter, J.B. Jeanneret, M.G. Rao (CEBAF) and many others for stimulating discussions and critical comments. Thanks also to F.S. Mitchell for mechanical drawings and Z. Tang for ANSYS simulations.

References

[1] W. Chou, LHC Project Note 3, CERN (October, 1995).

[2] Y. Baconnier, J.-B. Jeanneret and A. Poncet, CERN MT-ESH-Note 95-11, LHC-Note 326 (June 1995).

[3] W. Chou and F. Ruggiero, CERN LHC Project Note 2 (1995).

[4] F. Ruggiero, private communication.

[5] M. G. Rao, P. Kneisel and J. Susta, *Cryogenics,* V. 34, p. 377 (1994).