Fermi National Accelerator Laboratory

FERMILAB-Pub-94/263-A

Non-Gaussian Likelihood Function

Luca Amendola

October 5, 1994

Osservatorio Astronomico di Roma [a]
Viale del Parco Mellini, 84, Rome 00136 - Italy
and
NASA/Fermilab Astrophysics Center
PO Box 500, Batavia IL 60510 - USA

Abstract

We generalize the maximum likelihood method to non-Gaussian distribution functions by means of the multivariate Edgeworth expansion. We stress the potential interest of this technique in all those cosmological problems in which the determination of a non-Gaussian signature is relevant, e.g. in the analysis of large scale structure and cosmic microwave background. A first important result is that the asymptotic confidence limits on the parameters are sistematically widened when the higher order correlation functions are positive, with respect to the Gaussian case.

Subject headings: cosmology: large-scale structure of the Universe; galaxies: clustering; methods: statistics

[a] e-mail amendola@astrom.astro.it

Operated by Universities Research Association Inc. under contract with the United States Department of Energy

1 Introduction

Modern large scale astronomy is, to a large extent, the science of non-Gaussian random fields. One of the keys to understanding the formation and evolution of structure in the Universe resides infact in the statistical properties of the matter field. Rival theories of structure formation predicts different statistical features, both in the present Universe and in the primordial fluctuations encoded in the microwave background. To the scope of quantifying the statistical feature of the matter clustering, several techniques have been proposed. One of these, which is increasingly popular in astrophysics, is the estimation of parameters via the maximum likelihood method. For instance, the maximum likelihood method is currently widely employed in the analysis of cosmic microwave background (CMB) experiments, large scale surveys and cosmic velocity fields. Once a suitable likelihood function (LF) has been constructed, one estimates the best parameters simply by finding the maximum of the LF with respect to those parameters. The parameter estimates, say $\hat{\alpha}_i(x_i)$ (the hat is to distinguish between the estimates and the theoretically expected parameters), are then functions of the data x_i, i.e. of the random variables, and are therefore random variables themselves. If one is able to determine the distribution function $P(\hat{\alpha}_i)$ of the estimators, the confidence region (CR) of the parameters can be found as the value of the parameters for which the integral of $P(\hat{\alpha}_i)$ falls below a predetermined level.

There are however two problems with this approach. One is that usually we don't know how the data are distributed, and the usual Gaussian approximation may be very poor. This is the case, for instance, in large scale structure, where we already know that the density fluctuations are not Gaussian, even on fairly large scales. The second problem is that, even if we know perfectly well the data distribution, is often not trivial to find an analytical expression for the distribution $P(\hat{\alpha}_i)$ of the parameter estimators $\hat{\alpha}_i$. Aside the simplest case in which one only needs the raw sample variance or the sample mean of normal variates (or closely related quantities), one has invariably to resort to very time-consuming MonteCarlo methods. While this second problem can be always overcome by numerical methods, the first difficulty remains, unless one takes into consideration specifically designed non-Gaussian models, and for each of these determines the confidence regions for the relevant parameters. Other than being too model-dependent, in the current astrophysical applications this procedure is in many cases prohibitevely slow. It is then of interest to examine alternatives able to retain the useful features of the likelihood method while allowing more freedom in exploring different non-Gaussian (non-G, for shortness) distributions.

In this work we propose a perturbative method to estimate theoretical parameters when the higher-order multivariate moments (or n-points correlation functions) are non-vanishing, via an expansion around a Gaussian LF, the multivariate Edgeworth expansion (MEE). As long as the perturbative approach does not break down, i.e. as long as the departure from Gaussianity is mild, the MEE gives an answer to the first problem, the distribution function of the data, because it allows arbitrary values of the higher-order correlation functions. Then we still are left with the second problem: how do we determine in the general case the distribution function for our paramater estimators, necessary to produce the confidence regions? A first simple possibility is to approximate the $P(\hat{\alpha}_i)$ around its peak, previously determined by maximization of the LF, by a Gaussian distribution, multivariate in the parameter space.

This allows to determine an approximate covariance matrix, whose eigenvalues give the principal axis of the parameter CR (see e.g. Kendall, Stuart & Ord 1987). Notice that this is equivalent to assume the *parameter estimators*, which are functions of all the dataset, as Gaussian distributed, but makes no assumptions on the *data* themselves. When the number of data is large, this procedure can be justified by the central limit theorem (which however cannot guarantee the asymptotic Gaussianity in the general case). This first possibility, along with its limitations, is discussed in Sect. 3. To overcome the limits relative to the Gaussian approximation of the estimator distribution, and exploiting the analytic properties of the MEE, we adopt in Sect. 4 and Sect. 5 a second, exact, way to determine the CR for some of the relevant parameters. This is a non-Gaussian generalization of the χ^2 technique: instead of finding the CR by integration over the unknown distribution function of the sample estimators, we determine the CR by integrating the LF over the possible outcomes of an experiment. As in the usual χ^2 method, the acceptable values of a parameter will be all those for which the data lie not too distant from the predicted values, the "distance" being measured by the quantity $\chi_0^2 = x_i \lambda^{ij} x_j$, where x_i are the actual data and λ^{ij} is the inverse of the correlation matrix. The CR will in general depend on all the higher-order correlation functions included in the MEE, as it will be shown in Sect. 4. The formalism is then best suited to answer the question: how our results (i.e., best estimates and CR) change when the higher-order moments of the data distribution are not set to zero? If we have any reason to believe in some particular values for the non-G moments, then we can plot the CR for our parameters given those higher-order moments, and clearly the regions will be different for any set of higher-order moments. The relevance of examining how the confidence regions vary with respect to the non-G parameters is clear. Suppose in fact that two experiments, assuming Gaussianity, produce two non-overlapping CR for the same parameter, say the overall normalization of the correlation function. In general, the CR will be different in the non-Gaussian case, and it may happen that the two experiments are infact compatible when some level of non-Gaussianity is assumed. As we will show, in most cases the CR widens for positive higher-order moments, so that two non-overlapping results can be brought to agreement, *provided some amount of non-Gaussianity is allowed.* Other positive features of our formalism are that it exploits the full set of data, that it can be extended to higher and higher order moments, and that it is fully analytical.

To the order to which we limit ourselves here, we will be able to estimate the first non-G correlation function, i.e. the third-order moments. This estimate will share the good and less good properties of likelihood estimators: they are consistent estimators, but only asymptotically (i.e., for large samples) unbiassed, as we will show in Sect. 3. For the fourth-order cumulant there is not an estimator at all, since the LF is linear in it. We decided to keep track of it anyway, because it is still interesting to use the fourth-order cumulant as an external parameter, and see how our results change with different assumptions on it.

In principle one can include in the analysis all the set of higher-order moments considered relevant to the problem, but here we will limit ourselves to the first two higher-order terms, the 3- and 4-points correlation functions. For most purposes, this is the best we can do for comparing different models with observations, since current data do not permit accurate analysis of correlation functions of order higher than the fourth one.

Let us remark that we call here likelihood function the probability distribution function

$f(x_i, \alpha_i)$ of the data x_i (our random variables) defined in a sample space S, given some theoretical parameter α_i, which can be thought to lie in the parameter space P. Essentially, for any point in the parameter space, i.e. for any distribution function, we will integrate the LF over the sample space S, i.e. over all the possible outcomes of the experiment, to determine how likely or unlikely is the possibility that the actual data set has arisen from such a parametric choice. For a discussion of the advantage and disadvantage of this approach with respect to the alternative Bayesan one, in which the integration occurs over the space of the *theoretical* parameters (as opposed to the *sample estimators* of the theoretical parameters considered in the frequentist approach), we refer to standard textbooks like Kendall, Stuart & Ord (1987).

Beside presenting the basic formalism of the non-Gaussian LF, we discuss briefly in Sect. 6 its application to large scale structure and to the CMB. In the first case the non-Gaussian nature of the galaxy distribution is a well-established fact, so that the use of a non-G LF is certainly required. In the case of CMB, the current set of data is still not accurate enough to assess the issue. The estimate of a confidence region in non-G models is however crucial in view of the discrimination among different theories of structure formation.

2 Formalism

Let d^i be a set of experimental data, $i = 1, ..N$, and let us form the variables $x^i = d^i - t^i$, where t^i are the theoretical expected values for the measured quantities. To fix the ideas, one can think of d^i as the temperature fluctuation in the i-th pixel in a CMB experiment, or as the number of galaxies in a given volume of the Universe. Let c^{ij} be the correlation matrix

$$c^{ij} = < x^i x^j > , \tag{1}$$

and let us introduce the higher-order cumulant matrices (or n-point correlation functions)

$$k^{ijk} = < x^i x^j x^k > \qquad \text{(skewness matrix)}, \tag{2}$$

$$k^{ijkl} = < x^i x^j x^k x^l > - c^{ij}c^{kl} - c^{ik}c^{jl} - c^{il}c^{jk} \qquad \text{(kurtosis matrix)} \tag{3}$$

(we will sometimes use the words "skewness" and "kurtosis" to refer to the 3- and 4-point correlation functions, respectively, or to their overall amplitude; in the statistical literature, the definition of skewness is actually, in our notation, $\gamma_1 = k^{iii}/(c^{ii})^{3/2}$, and for the kurtosis $\gamma_2 = k^{iiii}/(c^{ii})^2$). The correlation matrices depend in general both on a number of theoretical parameters α_j, $j = 1, ..P$ (that we leave for the moment unspecified) and on the experimental errors. In most cases, we can assume the experimental errors to be Gaussian distributed (or even uncorrelated) so that they can be completely characterized by the correlation matrix e^{ij}, which is simply to be added in quadrature to the 2-point correlation function. It is useful to define then the matrix

$$\lambda_{ij} = (c^{ij} + e^{ij})^{-1} . \tag{4}$$

The problem of estimating the parameters α_j is solved by maximizing, with respect to the parameters, the likelihood function

$$L = f(\mathbf{x}) , \tag{5}$$

where $f(\mathbf{x})$ is the multivariate probability distribution function (PDF) for the random variables x_i. Clearly, knowing the LF one can, at least in principle, determine also the parameter CR, as will be discussed in the next sections. The main difficulty to this approach, however, is that we do not know, in general, the exact form for the PDF $f(\mathbf{x})$. The usual simplifying assumption is then that $f(\mathbf{x})$ is a multivariate Gaussian distribution

$$L_g = f(\mathbf{x}) = G(\mathbf{x}, \lambda) \equiv (2\pi)^{-N/2}|\lambda|^{1/2} \exp(-\frac{1}{2}x^i \lambda_{ij} x^j) \,. \tag{6}$$

where $|\lambda| = \det(\lambda_{ij})$. This is usually assumed, for instance, in analysing the CMB fluctuation maps and the cosmic velocity fields. A straightforward way to generalize the LF so as to include the higher-order correlation functions, which embody the non-Gaussian properties of the data, is provided by the multivariate Edgeworth expansion (MEE). An unknown PDF $f(\mathbf{x})$ can indeed be expanded around a multivariate Gaussian $G(x, \lambda)$ according to the formula (Chambers 1967; McCullagh 1984; Kendall, Stuart & Ord 1987)

$$f(\mathbf{x}) = G(\mathbf{x}, \lambda)[1 + \frac{1}{6}k^{ijk}h_{ijk}(\mathbf{x}, \lambda) + \frac{1}{24}k^{ijkl}h_{ijkl}(\mathbf{x}, \lambda) + \frac{1}{72}k^{ijk}k^{lmn}h_{i..n}(\mathbf{x}, \lambda) + ...] \,, \tag{7}$$

where $h_{ij..}$ are Hermite tensors, the multivariate generalizations of the Hermite polynomial. If there are r subscripts, the Hermite tensor $h_{ij..}$ is said to be of order r, and is given by

$$h_{ij...} = (-1)^r G^{-1}(\mathbf{x}, \lambda)\partial_{ij...}G(\mathbf{x}, \lambda) \,, \tag{8}$$

where $\partial_{ij...} = (\partial/\partial x_i)(\partial/\partial x_j)....$ The Hermite polynomials are located on the main diagonal of the Hermite tensors, when $\lambda_{ij} = \delta_{ij}$. Notice that the function $f(\mathbf{x})$ is normalized to unity, since the integrals of all the higher order terms from minus to plus infinity vanish. It can be shown that the MEE gives a good approximation to any distribution function provided that all the moments are defined and that the higher order correlation functions do not dominate over the Gaussian term. In other words, the MEE can be applied only in the limit of mild non-Gaussianity. More accurately, the approximation is good, in the sense that the error one makes in the truncation is smaller than the terms included, if the cumulants obey the same order-of-magnitude scaling of a standardized mean (Chambers 1967). This condition is satisfied, for instance, by the cumulants of the galaxy clustering in the scaling regime, which explains why the (univariate) Edgeworth expansion well approximates the probability distribution of the large scale density field (Juszkiewicz *et al.* 1994, Kofman & Bernardeau 1994). The same expansion has been also applied to the statistics of pencil-beam surveys, in which the one-dimensional power spectrum coefficients can be written as a genuine standardized mean (Amendola 1994). Finally, it has also been used to go beyond the Gaussian approximation in calculating the topological genus of weakly non-Gaussian fields (Matsubara 1994). Let us also note that the MEE lends itself to a further generalization: if the experimental errors are *not* Gaussian distributed, then the expansion for the data given the error correlation functions $e^{ij..}$ is the same as in Eq. (7), but with the new cumulants $K^{ij..} = k^{ij..} + e^{ij..}$. In fact, let x_t^i be the theoretical values whose measure is given by the data d^i, and let $\xi^i = d^i - x_t^i$ be the experimental error. The theoretical values are random variables in the sense that the theory usually predicts only their distribution, not their definite value.

For instance, once the monopole is subtracted, the standard cosmological models predict CMB fluctuations Gaussian distributed with zero mean, $t^i = 0$. Then we are concerned with the distribution of $x^i = x_t^i + (d^i - x_t^i) = x_t^i + \xi^i$, the sum of the theoretical values x_t^i and of the experimental errors ξ^i, both of which are random variables. If the two are independent, the general theorems on the random variables ensure that *the cumulants cumulate*, i.e. that the cumulants of x^i are the sum of the ones of x_t^i and of ξ^i.

Two properties are of great help in dealing with the MEE. The first is that $k^{ijk\cdots}$ and $h_{ijk\ldots}$ are contra- and co-variant tensors, respectively, with respect to linear transformations of the variables x_i. It follows then that $f(\mathbf{x})d\mathbf{x}$ is totally invariant with respect to the linear transformations which leave invariant the quadratic form $\chi^2 = x^i\lambda_{ij}x^j$. This property is very useful, because we can always diagonalize the quadratic form by choosing a linear combination $y^j = A_i^j x^i$ such that $\chi^2 = x^i\lambda_{ij}x^j = y^i\delta_{ij}y^j$. The MEE in the new variables y^i remains formally the same as in Eq. (7), with $x \to y$ and $\lambda \to \delta$, but now $G(\mathbf{y}, \delta)$ factorizes, and all the calculations are simplified. Notice that even if the new variables are uncorrelated, they are not statistically independent, since they are not (in general) Gaussian variates. The higher-order matrices are then not diagonalized. In the following we will often assume that the variable transformation has been already performed, so that we will write y and δ instead of x and λ, leaving all the other symbols unchanged. The second useful property is that the MEE is *analytically integrable* if the integration region is bounded by $\chi^2 = const$. This property will be exploited in Sect. 4.

3 Best estimates and asymptotic confidence regions

The likelihood estimates for the parameters are to be obtained by maximizing Eq. (7) with respect to the parameters. To illustrate some interesting points, let us put ourselves in the simplest case, in which all data are independent, and we only need to estimate the parameters σ and k_3 entering the 2- and 3-point correlation function as overall amplitudes:

$$c_{ij} = \sigma^2\delta_{ij}, \qquad k_{ijk} = k_3\delta_{ij}\delta_{jk}\,. \tag{9}$$

Because we are in such a simplified case, we will recover several well-known formulae of sampling statistics, like the variance of the standard deviation σ and of k_3. It is important to bear in mind, however, that the MEE is much more general than we are assuming in this section, since it can allow for full correlations among data, for experimental errors, and for non-linear parametric dependence.

For simplicity, we also assume that the sample kurtosis is negligible. Because of this, we can put the fourth order sample cumulant of the dataset to zero (see, e.g., Kendall, Stuart & Ord 1987):

$$\hat{k}_4 = \frac{N}{(N-1)(N-2)(N-3)}[(N+1)\sum_i x_i^4 - 3(N-1)(\sum_i x_i^2)^2] = 0, \tag{10}$$

so that we have, for large N,

$$\sum_i x_i^4 = 3(\sum_i x_i^2)^2\,. \tag{11}$$

We show here that the maximum likelihood estimators for the variance and for the skewness in the case of independent data and for $N \to \infty$ reduce to the usual sample quantities

$$\hat{\sigma}^2 = \sum_i x_i^2/(N-1), \tag{12}$$

$$\hat{k}_3 = \frac{N}{(N-1)(N-2)} \sum_i x_i^3 . \tag{13}$$

We will assume also that the average has been subtracted from the data, i.e. that $\sum_i x_i = 0$. This actually reduces the degrees of freedom, but in the limit of large N we can safely ignore this problem. If the distribution function of x_i is approximated in the limit of small k_3 by the univariate Edgeworth expansion

$$f_i = G(x_i, \sigma)[1 + k_3 h_{3i}/6 + k_3^2 h_{6i}/72], \tag{14}$$

where $G(x_i, \sigma)$ is a Gaussian function, then the multivariate distribution function for the dataset is

$$L(\mathbf{x}) = \prod_i f_i . \tag{15}$$

[In the notation of Eq. (8), $h_{3i} = h_{iii}$ and $h_{6i} = h_{i..i}$.] By the definition in (8) we have

$$\begin{aligned} h_{6i} &= \sigma^{-12}[x_i^6 - 15\sigma^2 x_i^4 + 45\sigma^4 x_i^2 - 15\sigma^6], \\ h_{3i} &= \sigma^{-6}[x_i^3 - 3\sigma^2 x_i]. \end{aligned} \tag{16}$$

Let us pause to evaluate the order-of-magnitude of the non-G corrections in the univariate Edgeworth expansion (14). Assuming $x_i \sim \sigma$, the first correction term is of the order of $\gamma_1 \equiv k_3/\sigma^3$, which is the dimensionless definition of skewness. The general rough requirement for the truncated Edgeworth expansion is then that $\gamma_1 \ll 1$. This condition will be encountered several times throughout this work. The maximum likelihood estimators for σ and k_3 are then the values $\hat{\sigma}, \hat{k}_3$ which maximize L, or, equivalently, its logarithm $\log L$. We have then the equations

$$\frac{d\log L}{d\sigma} = \sum_i \frac{d\log f_i}{d\sigma} = \sum_i \left\{ \frac{1}{\sigma^3}[x_i^2 - \sigma^2] + \frac{k_3}{\sigma^7}[2\sigma^2 x_i - x_i^3] + \frac{k_3^2}{4\sigma^{11}}[5\sigma^4 - 16\sigma^2 x_i^2 + 5x_i^4] \right\} = 0, \tag{17}$$

and

$$\frac{d\log L}{dk_3} = \sum_i \frac{d\log f_i}{dk_3} = \sum_i \left\{ \left[\frac{h_{3i}}{6} + \frac{k_3}{36} h_{6i} \right] / \left[1 + \frac{k_3 h_{3i}}{6} + \frac{k_3^2}{72} h_{6i} \right] \right\} = 0 . \tag{18}$$

To first order in k_3, the latter equation gives

$$\sum_i \left[\frac{h_{3i}}{6} + \frac{k_3}{36} h_{6i} - \frac{k_3}{36} h_{3i}^2 \right] = 0, \tag{19}$$

so that our estimator is

$$\hat{k}_3 = -\frac{6\sum_i h_{3i}}{\sum_i [h_{6i} - h_{3i}^2]} . \tag{20}$$

Suppose now that the solution for σ of Eqs. (17) and (18) is the usual variance estimator (12), with $N \approx N-1$. Then we can observe that, from (16),

$$\sum h_{6i} = \sum h_{3i}^2 - 3\sigma^{-10}(3\sum x_i^4 - 12\sigma^2 \sum x_i^2 + 5\sum \sigma^4) = \sum h_{3i}^2 - 6N\sigma^{-6}\,, \tag{21}$$

where in the last step we used Eq. (11) and Eq. (12). Inserting (21) in (20) we obtain finally (assuming that $\sum_i x_i = 0$)

$$\hat{k}_3 = \frac{\sum_i h_{3i}}{N\sigma^{-6}} = \frac{\sum_i x_i^3}{N}\,, \tag{22}$$

which coincides with (13) for large N. Finally, going back to Eq. (17), and inserting $k_3 = \hat{k}_3$ we recover the sample variance $\hat{\sigma}^2 = \sum_i x_i^2/N$, so that our proof is complete. If needed, the small bias introduced by a finite N can be easily removed just multiplying $\hat{k}_3, \hat{\sigma}$ derived from the likelihood method by suitable functions of N.

The same calculation can be carried out in the more general case of dipendent variables, but the search for the maximum is more simply performed numerically when the situation is more complicated (e.g., because of the presence of experimental errors, or of more parameters, or more complicate parameter dependence). We just quote the result when only an overall skewness parameter is required, as when the 3-point correlation function is given by $k_{ijk} = k_3 s_{ijk}$, and the tensor s_{ijk} is known (see Section 5). The best estimate for k_3 is then

$$\hat{k}_3 = -6\frac{s^{ijk}h_{ijk}}{s^{ijk}s^{lmn}h_{ijklmn}}\,, \tag{23}$$

which reduces to the expression above when $s_{ijk} = \delta_{ij}\delta_{jk}$, using the relation

$$\sum_{ij} h_{iiijjj} = \sum h_{6i} + (\sum_i h_{3i})^2 - \sum_i h_{3i}^2\,, \tag{24}$$

and observing that $(\sum h_{3i})^2$ is of order $\hat{k}_3^2$, and thus negligible.

Once we have the best estimators $\hat{\alpha}_i(\mathbf{x})$ of our parameters, we need to estimate the confidence regions for that paramaters, i.e. the range of values in which we expect to find our estimators to a certain probability, given that the data distribution is approximated by the MEE. The problem consists in determining the behavior of the unknown distribution $P[\hat{\alpha}_i(\mathbf{x})]$, when we know the distribution for the random variables x_i. This problem is generally unsoluble analitycally, and the common approach is to resort to MonteCarlo simulations of the data. However, we can always approximate $P(\hat{\alpha}_i)$ *around its peak* by a Gaussian distribution multivariate *in the parameter space*; if the number of data $N \to \infty$, this procedure can be justified by the central limit theorem. For instance, if $\hat{k}_3 = \sum x_i^3/N$, then its distribution will tend to a Gaussian whatever the distribution of the data x_i is, in the limit of large N. In more general cases (e.g. correlated data) the central limit theorem does not guarantee the asymptotic Gaussianity; we can expect however it to be a first reasonable approximation far from the tails. If this approximation is adopted, then it can be shown (see e.g. Kendall, Stuart & Ord 1987) that the covariance matrix of the parameters can be written as

$$\Sigma_{ab}^{-1} = -\frac{\partial \log L(\mathbf{x}, \alpha_a)}{\partial\alpha_a \partial\alpha_b}\Big|_{\alpha_a=\hat{\alpha}_a}\,, \tag{25}$$

where a, b run over the dimensionality P of the parameter space. The 1σ confidence region is then enclosed inside the P-dimensional ellipses with principal axis equal to $\lambda_a^{1/2}$, where λ_a are the eigenvalues of Σ_{ab}. Let us illustrate this in the same simplified case as above: N independent data characterized by variance $\alpha_1 = \sigma$ and skewness $\alpha_2 = k_3$. To further simplify, we assume that the mixed components $\Sigma_{12} = \Sigma_{21}$ can be neglected (see below). The component Σ_{22} is then easily calculated as

$$\Sigma_{22}^{-1} = -\sum_{i,j} h_{iiijjj}/36\,, \tag{26}$$

Thus, using Eq. (24), the variance of $\hat{k}_3$ turns out to be (dropping the hats here and below)

$$\Sigma_{22} = 6\sigma^6/N\,, \tag{27}$$

which, not unexpectedly, is the sample skewness variance, i.e. the scatter in the skewness of Gaussian samples (for the dimensionless skewness defined as $\gamma_1 = k_3/\sigma^3$ the variance is $6/N$). In other words, to this order of approximation, the variance in the sample skewness in non-G data equals the variance in the sample skewness of Gaussian distributed data. The generalization to dependent data is

$$\Sigma_{22}^{-1} = -s^{ijk}s^{lmn}h_{ijklmn}/36 \tag{28}$$

which gives then the variance of the estimator $\hat{k}_3$ in the general case.

More interesting is the error in the variance parameter σ when not only a non-zero skewness k_3 is present, but also a non-zero kurtosis parameter k_4, defined in a way similar to k_3 as $k_{ijkl} = k_4 s_{ijkl}$. Then the result turns out to be, in the same approximations as above,

$$\Sigma_{11} = \frac{\sigma^2}{2N}\left[1 + \gamma_2/2\right]\,, \tag{29}$$

where $\gamma_2 = k_4/\sigma^4$ is the dimensionless kurtosis. The mixed components amount to $\Sigma_{12}^{-1} = \Sigma_{21}^{-1} = -Nk_3/\sigma^7$. Then we see that in the determinant of Σ_{ab} we have $[\Sigma_{12}^{-1}]^2 \ll [\Sigma_{11}^{-1}\Sigma_{22}^{-1}]$ for $k_3/\sigma^3 \ll 1$, which is again the mild non-Gaussianity condition we are assuming throughout this work.

Eq. (29) is again an expected results: it is infact the variance of the standard deviation σ for N independent data when a non-zero fourth-order moment is included. The first term in (29) is the usual variance of the sample variance for Gaussian, independent data. The second term is due to the kurtosis correction: it will broaden the CR for σ when k_4 is positive, and will shrink it when it is negative. Depending on the relative amplitude of the higher-order corrections, the CR for the variance can extend or reduce. It is important however to remark that this estimate of the confidence regions is approximated, and that it can be trusted only around the peak of the likelihood function. This means that we cannot use the CR estimated by the method exposed here when we are interested in large deviations from the best estimates. The true CR will in general be more and more different from this simple estimate as its probability content grows: to a confidence level of, say, 99.7%, we cannot reliably associate a CR of $3\Sigma_{11}^{1/2}$, as we would do were the $P(\hat{\alpha}_i)$ a perfect Gaussian distribution.

This limitation is the main motivation for the rest of this work. Adopting a χ^2 technique, we will be able to give an analytical expression for the CR of the variance (or of other parameters entering χ^2) when non-G corrections are present. This is useful whenever we actually measured non-vanishing higher-order cumulants and wish to quote a CR for the variance allowing for the non-Gaussianity, or when, more generally, we have reason to suspect that our data are non-Gaussian and we wish to investigate how the CR vary with different non-Gaussian assumptions. As already remarked, non-Gaussianity can also be invoked to put in agreement two experimental results reporting non-overlapping CR. The results of the next sections will confirm the approximate trend of Eq. (29), as long as the CR does not extend into the tails of the paramater distribution.

4 Non-Gaussian χ^2 method

If our data are distributed following the MEE, then we can measure the likelihood to have found our actual dataset integrating the LF over all the possible outcomes of our experiment. According to the χ^2 method, the actual dataset is more likely to have occurred, given our assumptions, the higher is the probability to obtain values of χ^2 larger than the measured χ_0^2. Then the relevant integral we have to deal with is

$$M(\chi_0) = \int_{\chi^2 \leq \chi_0^2} L(x, \lambda) \prod_i dx_i \,, \tag{30}$$

where the region of integration extends over all the possible data values which lie inside the region delimited by the actual value χ_0^2. The function $M(\chi_0)$ gives then the probability of occurrence of a value of χ^2 smaller than the one actually measured. We can then use $M(\chi_0)$ for evaluating a CR for the parameters which enter χ_0^2, like the quadrupole and the primordial slope in the case of CMB. The CR will depend parametrically on the higher-order moments; however, this will not provide a CR for the higher-order moments themselves. The method of the previous section can always be employed to yield a first approximation for such moments. Both too high and too small values of χ_0^2 have to be rejected; fixing a confidence level of $1 - \varepsilon$, we will consider acceptables the values of the parameters for which $M(\chi_0)$ is larger than $\varepsilon/2$ and smaller than $1 - \varepsilon/2$. Notice that the theoretical parameters enter $M(\chi_0)$ both through the integrand $L(x, \lambda)$ and the integration region χ_0^2. This section is devoted to the evaluation of (30).

Let us split the LF into a Gaussian part and a non-G correction,

$$L = L_g + L_{ng} \,. \tag{31}$$

The integral of the Gaussian part is the standard one, and it is easily done:

$$\int G(x, \lambda) \prod_i dx_i = \int G(y, \delta) \prod_i dy_i = \int_0^{\chi_0^2} P_N(\chi^2) d\chi^2 = F_N(\chi_0) \,, \tag{32}$$

where $P_N(\chi^2)$ is the χ^2 PDF with N degrees of freedom, and F_N its cumulative integral. Notice that the integral has been performed over a compact region in x-space whose boundary

is $\chi^2 = \chi_0^2$. It is then convenient to change variables in the integral, from y^j to the hyperradius χ^2 and $N-1$ angles

$$\int \prod_i dx_i \to \frac{1}{2}\int (\chi^2)^{p-1} d(\chi^2) d\Omega = \frac{A_{2p}}{2}\int (\chi^2)^{p-1} d(\chi^2)\,, \tag{33}$$

where $p = N/2$ and $A_{2p} = 2\pi^p/\Gamma(p)$ (the surface area of a unitary $(N-1)$-sphere). The same procedure will be applied several times in the following.

For the non-G sector we have to consider separately the three last terms in the MEE (7). However, since it will be shown shortly that the term linear in the skewness does not contribute to the final result, we will focus only on the two last terms in the MEE. Let us consider the term in k^{ijkl}. Its integral can be written as

$$\begin{aligned} K &= \frac{k^{ijkl}(x)}{24}\int G(x,\lambda) h_{ijkl}(x,\lambda) \prod_i dx_i \\ &= \frac{k^{ijkl}(y)}{24}\int G(y,\delta) h_{ijkl}(y,\delta) \prod_i dy_i = \frac{k^{ijkl}(y)}{24}\int \partial_i\partial_j\partial_k\partial_l \prod_i G_i dy_i\,, \end{aligned} \tag{34}$$

where $G_i = (2\pi)^{-1/2}\exp(-y_i^2/2)$ and where the kurtosis tensor k^{ijkl} in the first line is to be calculated with respect to x^i, while in the last line with respect to y^i. Since $y^i = A^i_a x^a$, then

$$k^{ijkl}(y) = A^i_a A^j_b A^k_c A^l_d k^{abcd}(x)\,, \tag{35}$$

and likewise for k^{ijk}. Suppose now one of the subscripts, say i, appears an odd number of times, like in k^{iiij}. Let us call then i an odd index. The integral K will then be odd in y_i. Since the integration region is symmetric around the origin, K would vanish. This shows that any term in K containing odd indexes of k^{ijkl} must vanish. This explains also why the skewness term h_{ijk}, which always contains some odd index, gives no contribution to the likelihood integral. The only non-zero terms in K are then of the type k^{jjkk} and k^{jjjj} (the index order is irrelevant). We then need only two kinds of integrals for as concerns K. Let us evaluate the first kind:

$$I_1 = \int \prod_{i\neq j,k} G_i dy_i [\int dy_j dy_k \partial_j^2 \partial_k^2 G_j G_k]\,. \tag{36}$$

The inner integral must be evaluated inside the circle bounded by $\rho_{jk}^2 = \chi_0^2 - \chi_{jk}^2$, where $\chi_{jk}^2 = \sum_{(i\neq j,k)} y_i^2$. Transforming.the variables (y_j, y_k) to the radius ρ_{jk} and the angle θ, and integrating over the new variables, we obtain

$$I_1 = \int (\prod_{i\neq j,k} G_i dy_i) G_2(\rho_{jk}) f_1(\rho_{jk}) = G_N(\chi_0)\int f_1(\rho_{jk}) \prod_{i\neq j,k} dy_i\,, \tag{37}$$

where we define $G_N(\chi_0) = (2\pi)^{-N/2}\exp(-\chi_0^2/2)$, and where

$$f_1(\rho_{jk}) = \pi(4\rho_{jk}^2 - \rho_{jk}^4)/4\,. \tag{38}$$

Changing again variables under the integral to the hyperradius χ_{jk}^2 and $N-3$ angles, we obtain

$$I_1 = \frac{1}{2} G_N(\chi_0) A_{2p_2} \int_0^{\chi_0^2} f_1(\rho_{jk})(\chi_{jk}^2)^{p_2-1} d\chi_{jk}^2 = q_1(\chi_0) G_N(\chi_0)\,, \tag{39}$$

where $p_2 = (N-2)/2$, and where

$$q_1(\chi_0) = \frac{1}{2}\pi^{N/2}\chi_0^N [N+2-\chi_0^2]/\Gamma(2+N/2)\,. \tag{40}$$

All the other integrals we need can be obtained in similar ways. For instance, the second kind of non-vanishing integral in K is

$$I_2 = \int \prod_{i\neq j} G_i dy_i [\int dy_j \partial_j^4 G_j] = \frac{1}{2} G_N(\chi_0) A_{2p_1} \int_0^{\chi_0^2} f_2(\rho_j)(\chi_j^2)^{p_1-1} d\chi_j^2 = q_2(\chi_0) G_N(\chi_0)\,, \tag{41}$$

where $p_1 = (N-1)/2$ and

$$q_2(\chi_0) = \frac{3}{2}\pi^{N/2}\chi_0^N \left[N+2-\chi_0^2\right]/\Gamma(2+N/2)\,. \tag{42}$$

For as concerns the last term in (7), we need only to evaluate three new integrals, from the terms h_{jjkkll}, h_{jjjjkk} and $h_{j\ldots j}$. Let us denote these integrals by I_3, I_4 and I_5. In complete analogy to the two integrals I_1, I_2, we find $I_i = G_N(\chi_0) q_i(\chi_0)$ where

$$\begin{aligned} q_3(\chi_0) &= \frac{1}{4}\pi^{N/2}\chi_0^N h(\chi_0)\,, \\ q_4(\chi_0) &= \frac{3}{4}\pi^{N/2}\chi_0^N h(\chi_0)\,, \\ q_5(\chi_0) &= \frac{15}{4}\pi^{N/2}\chi_0^N h(\chi_0)\,, \end{aligned} \tag{43}$$

and where

$$h(\chi_0) = \left[-\frac{4}{\Gamma(1+N/2)} + \frac{4\chi_0^2}{\Gamma(2+N/2)} - \frac{\chi_0^4}{\Gamma(3+N/2)}\right]. \tag{44}$$

These expressions are all what we need for the complete evaluation of the likelihood integral. The general result is then

$$\begin{aligned} M(\chi_0) &= \int L \prod dx_i = F_N(\chi_0) \\ &+ \frac{G_N(\chi_0)\pi^{N/2}\chi_0^N}{2\Gamma(2+N/2)} \left[C_a\left(N+2-\chi_0^2\right) + C_b\left(-N-2+2\chi_0^2 - \frac{\chi_0^4}{N+4}\right)\right], \end{aligned} \tag{45}$$

where $C_a = c_1 + 3c_2$, and $C_b = c_3 + 3c_4 + 15c_5$, and the coefficients c_i are formed by summing over all the even diagonals of the correlation tensors $k^{ij\cdot\cdot}$ and multiplying for the Edgeworth coefficients (1/24) for c_1, c_2 and (1/72) for c_3, c_4 and c_5. Let us denote with $\mathrm{Tr}_{ab\cdot\cdot}(k^{ij\cdots})$ the sum over all the disjoint partitions of a-plets, b-plets, etc. of equal indexes: e.g., $\mathrm{Tr}_{22}(k^{ijkl})$ means summing over all terms like $k^{iikk}, k^{ikik}, k^{ikki}$ but without including k^{iiii};

or, $\mathrm{Tr}_{24}(k^{ijk}k^{lmn})$ means summing over terms like $k^{iii}k^{ijj}$ or $k^{iij}k^{jii}$. Then, the coefficients c_i in Eq. (45) can be written as

$$\begin{aligned} c_1 &= (1/24)\mathrm{Tr}_{22}(k^{ijkl}), \qquad c_2 = (1/24)\mathrm{Tr}_4(k^{ijkl}), \\ c_3 &= (1/72)\mathrm{Tr}_{222}(k^{ijk}k^{lmn}), \quad c_4 = (1/72)\mathrm{Tr}_{24}(k^{ijk}k^{lmn}), \\ c_5 &= (1/72)\mathrm{Tr}_6(k^{ijk}k^{lmn}). \end{aligned} \tag{46}$$

Let us make some comments on the result so far obtained. First, notice that $M(\chi_0)$ is a cumulative function and as such it has to be a monotonically increasing function of its argument bounded by zero and unity. This provides a simple way to check the consistency of our assumptions: when the higher-order moments are too large, the MEE breaks down, $M(\chi_0)$ is no longer monotonic, and can decrease below zero or above unity. Second, let us suppose that the higher-order correlation functions are positive, which is the case for the galaxy clustering (see Section 6). Then the non-G corrections in Eq. (45) are negative for $\chi_0^2 \gg N$. The value of $\chi_0(\varepsilon)$, corresponding to a probability content $M(\chi_0) = 1 - \varepsilon$, is a measure of how large is the confidence region associated with the threshold ε, if χ_0 is single-valued on the parameter space, a common occurrence in practice. The fact that the corrections are negative for $\chi_0^2 \gg N$ implies that the value of $\chi_0 = \chi_0(\varepsilon)$ is larger than in the purely Gaussian case, in the limit of $\varepsilon \to 0$. Consequently, if the higher-order correlation functions are positive, *the confidence regions are sistematically widened when the non-Gaussian corrections are taken into account.* For ε not very close to zero is not possible to make such a definite statement; the regions of confidence will widen or narrow depending on the value of the moments, as will be graphically shown in the next section. Let us remember that for two-tail tests the CR is enclosed by the upper limit $\chi_0^{(1)}(\varepsilon/2)$ and the lower limit $\chi_0^{(2)}(1-\varepsilon/2)$, and the limits behave differently depending on ε and on the higher-order moments. Finally, it is easy to write down the result in the particular case in which all the cumulant matrices are diagonal, i.e. for statistically independent variables. In this case the variables y^i are simply equal to x^i/σ_i, if $\sigma_i = (\lambda_i^i)^{-1/2}$, and we can put $k^{iii}(y) = k^{iii}(x)/\sigma^3 \equiv \gamma_{1,i}$, and likewise $k^{iiii}(y) \equiv \gamma_{2,i}$ (skewness and kurtosis coefficients). Then, we have $c_1 = c_3 = c_4 = 0$, and Eq. (45) can be simplified to

$$M(\chi_0) = F_N(\chi_0) + G_N(\chi_0)q(\chi_0), \tag{47}$$

where

$$q(\chi_0) = \frac{6\pi^{N/2}\chi_0^N}{(N+2)\Gamma(N/2)}\left\{\frac{\gamma_2}{24}\left[(N+2)-\chi_0^2\right] + \frac{5}{72}\gamma_1^2\left[-(N+2)+2\chi_0^2 - \frac{\chi_0^4}{N+4}\right]\right\}, \tag{48}$$

and where we introduced the average squared skewness, $\gamma_1^2 = \sum \gamma_{1,i}^2/N$, and the average kurtosis, $\gamma_2 = \sum \gamma_{2,i}/N$.

5 Graphical examples

This section is devoted to illustrate graphically some properties of the function $M(\chi_0)$ in its simplified version (47) above, first putting $\gamma_1 = 0$, then $\gamma_2 = 0$, and assuming $N = 10$

and $N = 100$. In all this section we can think of χ_0 as depending monotonically on one single parameter, for instance the overall normalization $A > 0$ of the correlation function: $\chi_0^2(A) = x^i x^j (Ac_{ij} + e_{ij})^{-1}$. Then it appears that χ_0^2 decreases from a finite, positive value to zero as A goes from zero to infinity. The range in which A is bounded increases or decreases with the bounding range of χ_0; we can then speak of a CR on χ_0 meaning in fact the corresponding CR on the parameter A. In the general case, the relation between χ_0 and its parameters can be quite more complicated. In Fig. 1*a* (for $\gamma_1 = 0$ and $N = 10$), we show how the function $M(\chi_0)$ varies with respect to the non-Gaussian parameter γ_2. Schematically, for $\chi_0^2/N > 1$, the function $M(\chi_0)$ decreases when $\gamma_2 > 0$ and increases in the opposite case. As anticipated, for too large a γ_2, $M(\chi_0)$ develops a non-monotonic behavior. The consequence of the behavior of $M(\chi_0)$ on the confidence region of χ_0 is represented in Fig. 1*b*, where the contour plots of the surface $M(\chi_0, \gamma_2)$ are shown. Consider for instance the two outer contours, corresponding to $M = .01$, the leftmost, and $M = .99$, the rightmost. The important point is that the range of χ_0 inside such confidence levels increases for increasing γ_2; with respect to the Gaussian case, $\gamma_2 = 0$, the acceptable region for χ_0 widens substantially even for a small non-Gaussianity. As a consequence, a value as high as, say, $\chi_0^2/N = 2.5$, is inside the 99% confidence level if $\gamma_2 > .2$. The same is true for the other contour levels, although with a less remarkable trend. This behavior confirms the approximate result of Eq. (29). As anticipated, this means that the non-G confidence regions will be larger and larger (if the higher moments are positive) than the corresponding Gaussian regions for higher and higher probability thresholds. Notice that in this case the parameter γ_2 itself cannot be given a CR, since as we already noticed the LF has no maximum when varied with respect to it. We can use γ_2 only as an external parameter, either provided by theory, or estimated from the data in some other way. Fig. 2*a,b* reports the same features for $\gamma_1 = 0, N = 100$. Now the confidence regions are much narrower, because of the increased number of experimental data.

The situation is qualitatively different considering $\gamma_2 = 0$ and varying γ_1, the average skewness. Fig. 3 and Fig. 4 are the plots for this case ($N = 10$ and $N = 100$, respectively). The contour levels are obviously symmetric for $\pm\gamma_1$. Now for any given χ_0 there is a CR for γ_1 and viceversa, so that a bound can be given on each parameter given the other one, although the joint CR for *both* parameters is infinite. Now one can see two different features in the contour plots. For the outer contours, delimiting levels of 1% on both tails, the CR of χ_0 *increases* for larger $|\gamma_1|$, with a minimum for the Gaussian case. For the internal contours, however, the CR actually shrinks for larger $|\gamma_1|$, being maximal at the Gaussian point. It is clear that in the general case, $\gamma_1, \gamma_2 \neq 0$, the topography of the LF can be quite complicated.

6 Comments on practical application

The results of the previous sections can be employed to estimate theoretical parameters and confidence regions in several interesting cases. We consider here two of these, the large scale structure (LSS) of galaxies and the CMB.

In the case of LSS surveys, the data usually consist of the fluctuations $x^i = \delta n^i/\hat{n}$ in the number counts of galaxies in the i-th cell in which the survey is partitioned. (We assume

here for simplicity that the average density $\bar{n}$ is fixed *a priori*. Otherwise, we can include it in the set of parameters to be estimated.) The main problem in applying the formalism developed so far to real situations is to choose a "good" set of theoretical parameters α_j. In principle we can parametrize the statistical properties of the LSS in an infinite number of ways. However, the particular set of parameters we are going to adopt has been singled out in the current literature, both theoretical and observational, with very few exceptions. Assuming for the correlation function the power-law form $\xi(r) = (r_0/r)^\gamma$, the cell-averaged c^{ij} is given by the following expression

$$c^{ij} = \int \xi(r_{12}) W_{R_i}(\mathbf{r}_1) W_{R_j}(\mathbf{r}_2) d\mathbf{r}_1 d\mathbf{r}_2 \,, \tag{49}$$

where $r_{12} = |\mathbf{r}_1 - \mathbf{r}_2|$, and W_{R_i} (W_{R_j}) is the normalized window function of characteristic size R_i (R_j) relative to the i-th (j-th) cell. If the cells i, j are fully characterized by a size R and a separation s_{ij}, the integral (49) can be written as

$$c^{ij} = J(\gamma, R/s_{ij})(R/r_0)^{-\gamma} \,, \tag{50}$$

where $J(\gamma, R/s_{ij})$ is a dimensionless function of γ and R/s_{ij}. Following standard work (e.g. Peebles 1980) we will then write for the higher-order correlation functions the following expressions

$$\begin{aligned} k^{ijk} &= Q(c^{ij}c^{jk} + c^{ik}c^{jk} + c^{ik}c^{ij}) \,, \\ k^{ijkl} &= R_a \sum_2 c^{ij}c^{jk}c^{kl} + R_b \sum_3 c^{ij}c^{ik}c^{il} \,, \end{aligned} \tag{51}$$

where $\sum_2$ ($\sum_3$) means summing over all the 12 (4) tree graphs with at most two (three) connecting lines per vertex (i.e. summing over topologically equivalent graph configurations). Note that we define Q, R_a and R_b in terms of the *cell-averaged* correlation functions, rather than in terms of $\xi(r)$, as currently done. Our definition has the advantage that from Q, R_a and R_b one can obtain directly the often quoted scaling coefficients $S_3 = 3Q$ and $S_4 = 12R_a + 4R_b$, without complicated integrals over the window functions. The drawback is that our Q, R_a, R_b cannot be compared directly to the values reported in literature, albeit the difference should be very small.

Several analysis of large scale surveys show that Q, R_a, R_b are fairly constant over several scales, and of order unity. On scales larger that $\approx 10h^{-1}$ Mpc, however, the power-law form of c^{ij} is not longer acceptable. For such scales is preferable to parametrize instead the power spectrum $P(k)$ and to use the identity

$$\xi(r_{ij}) = \frac{1}{2\pi^2 r_{ij}} \int_0^\infty kP(k) \sin(kr_{ij}) dk \,, \tag{52}$$

from which, using Eq. (49),

$$c^{ij} = \frac{1}{2\pi^2 s_{ij}} \int_0^\infty kP(k) W_k^2 \sin(ks_{ij}) dk \,, \tag{53}$$

where W_k is the Fourier transforms of the window function. Various forms of $P(k)$ have been proposed so far. For instance, one can assume the simple functional form proposed by Peacock (1991), with its two scale parameters k_0, k_1, or the CDM-like form of Efstathiou, Bond & White (1992), involving an overall normalization and a dimensionless parameter Γ. To give an idea of how big the non-G corrections are, let us assume to have N independent data (i.e., data on cells at separations much larger than the correlation length) and let us estimate the parameters γ_1, γ_2 of Eq. (48). Since $\gamma_{1,i}, \gamma_{2,i}$ and σ_i are the same for all the N data, one has (dropping the subscript i) $\gamma_2 = k^{iiii}(x)/\sigma^4 = S_4\sigma^2$ and $\gamma_1^2 = S_3^2\sigma^2$. For $S_3 \approx 3$ and $S_4 \approx 20$, as large scale surveys suggest, one gets $\gamma_2 \approx 20\sigma^2$, and $\gamma_1^2 \approx 10\sigma^2$. For scales around 10 h^{-1} Mpc or so, where $\sigma^2 \approx 1$, γ_1, γ_2 are then very large, but they decrease rapidly for larger scales. On scales larger than 30 h^{-1} Mpc or so, γ_1, γ_2 are small enough to use the MEE also near the tails.

The non-G LF allows a determination of the parametric set in such a way that the best estimate of one parameter depends on all the other ones, unlike the common procedure of estimating one parameter fixing the others (in particular, fixing the non-Gaussian parameters to zero). For instance, the usual way of estimating r_0, γ is to find the best χ^2 power-law fit to the observed correlation function, which amounts to assume a Gaussian distribution around the mean values. Both the estimate and the confidence region would then be corrected by the higher order terms. However, as already mentioned, we can use the MEE for estimating the higher-order moments themselves only if enough terms have been included in the expansion. The reason is clear by looking at the Eq. (7): at this order of truncation, the expansion is linear in the fourth order moment, and as a consequence it has no maximum when derivated with respect to, e.g., R_a or R_b. The best estimate does not exist at all. We can give however an estimate for Q, and we can expect it to be a good estimate as long as it is in the regime in which the MEE holds. A simple way to check this is to see whether for that value of Q the function $M(\chi_0)$ is well-behaved, i.e. is a monotonic increasing function bounded by zero and unity. In principle, one can proceed further, including more and more terms in the LF, so that one can reach not only a higher degree of approximation, but also estimate the error introduced by the truncation itself. Needless to say, these goods come at the price of a factorial increase in algebraic complication.

Once we have chosen our parameter set, the only remaining difficulty is to evaluate the coefficients $c_1, ..c_5$. Let us remark that the Eqs. (51) are valid with respect to the original data x^i, while we need the correlation functions for $y^i = A^i_j x^j$ to evaluate $c_1, ..c_5$. The relation between the two sets of correlation functions is provided by Eq. (35). The evaluation of $c_1, ..c_5$ is straightforward. One needs simply to scan all the possible combinations of indexes $i, j, k, ..$ and sum only those tensor components with all equal indexes (for c_2 and c_5), or those with all paired indexes (for c_1 and c_3), or finally those with a $(2,4)$ index structure (for c_4). A more explicit expression for the coefficients can also be found in specific cases (e.g. exploiting the symmetry under index permutation of the tensors in (51)), but the general calculation can be coded so easily on computers that we prefer to leave it in the form (46). Let us then summarize the steps needed to analyze a given set of data. First, one selects a value for the chosen parameter set inside a plausible range. Second, one diagonalizes, for that particular parameter set, the quadratic form $x^i\lambda_{ij}x^j$ so to determine the matrix A^i_j such that $y^i = A^i_j x^j$. Third, one evaluates the five coefficients $c_1, ..c_5$ summing over all the

required tensor components. Fourth, one evaluates L and $M(\chi_0)$ for the selected parameter set. Fifth, one repeates the four previous steps spanning a reasonable range in the parameter space. Finally, the values for which L has a maximum inside the range, if any, are the best estimate of the set of parameters, while the region for which $\varepsilon/2 < M(\chi_0) < 1 - \varepsilon/2$ defines their joint confidence region.

For the CMB, the procedure is very similar. The major difference is the set of parameters we are interested in. For simplicity, let us consider an experiment like COBE, in which the large angular beam size is mainly designed to study the Sachs-Wolfe effect of primordial fluctuations. The two-point angular correlation function can be conveniently written as

$$c^{ij} = \sum_{l=2}^{\infty} C_l W_l(\beta) P_l(\cos\alpha_{ij}), \tag{54}$$

where α_{ij} is the angular separation between the i-th and j-th pixel on the sky, $W_l(\beta)$ is the observational window function relative to a beam angular size β, P_l is the Legendre polynomial of order l, and C_l is defined in terms of the multipole coefficients a_l^m as

$$C_l = \sum_{m=-l}^{l} |a_l^m|^2 . \tag{55}$$

For the Sachs-Wolfe effect of fluctuations with power spectrum $P = Ak^n$ we can derive the expected variance of the amplitudes a_l^m as (e.g. Kolb & Turner 1989)

$$\sigma_l^2 \equiv < |a_l^m|^2 > = \frac{(Q_{rms}^{PS})^2}{5} \frac{\Gamma[(9-n)/2]\Gamma[l+(n-1)/2]}{\Gamma[(3+n)/2]\Gamma[l+(5-n)/2]}, \tag{56}$$

where Q_{rms}^{PS} is the expected quadrupole signal derived from the correlation function. The theoretical value for C_l is then $C_l = (2l+1)\sigma_l^2$, and it depends uniquely on Q_{rms}^{PS} and n. Finally, we rewrite Eq. (54) as

$$c^{ij} = \sum_{l=2}^{\infty} (2l+1)\sigma_l^2 W_l(\beta) P_l(\cos\alpha_{ij}) . \tag{57}$$

The correlation function for the Sachs-Wolfe temperature fluctuations is then parametrized by Q_{rms}^{PS} and n. The situation for the higher-order correlation functions is much less well established. Non-Gaussianity in the CMB is predicted by several models, like topological defect theories, or non-standard inflation, or can be induced by some kind of foreground contamination. There is not, however, a single, widely accepted way to parametrize non-Gaussianity in this context (see e.g. Luo & Schramm 1993 for some possible alternatives). A very simple possibility is to assume for the CMB n-point correlation functions the same kind of scaling observed in LSS. Preliminary constraints on the 3-point parameter from the COBE data have already been published (Hinshaw *et al.* 1994). Some model of inflation predicts indeed this sort of scaling, although the expected amplitude of the non-Gaussian signal in standard models is far below observability (Falk, Rangarajan & Srednicki 1993; Gangui *et al.* 1994). For small scale experiments, the c^{ij} parametrization is different, and often a Gaussian shape $c^{ij} = c_0 \exp(-\alpha_{ij}^2/2\alpha_c^2)$, is assumed. The formalism here presented can be clearly applied to any desired form of the correlation function.

7 Conclusions

Let us summarize the results reported here. This work is aimed at presenting a new analytic formalism for parametric estimation with the maximum likelihood method for non-Gaussian random fields. The method can be applied to a large class of astrophysical problems. The non-Gaussian likelihood function allows the determination of a full set of parameters and their *joint* confidence region, without arbitrarily fixing some of them, as long as enough non-linear terms are included in the expansion. The CR for all the relevant parameters can be estimated by approximating the distribution function for the parameter estimators around its peak by a Gaussian, as in Sect. 3. To overcome this level of approximation, in Sect. 4 we generalized the χ^2 method to include non-Gaussian corrections. The most interesting result is then that the CR for the parameters which enter χ_0^2 is systematically widened by the inclusion of the non-Gaussian terms, in the limit of $\varepsilon \to 0$. Two experiments producing incompatible results can then be brought to agreement when third and fourth-order cumulants are introduced. In the more general case, the CR may extend or reduce.

While we leave the analysis of real data to subsequent work, we displayed some preliminary comments on the application to two important cases, large scale structure and cosmic microwave background.

There are two main limitations to the method. One is that we obviously have to truncate the MEE to some order, and consequently the data analysis implicitly assumes that all the higher moments vanish. The second limitation is that the method is not applicable to strongly non-Gaussian field, where the MEE breaks down. This can be seen directly from Eq. (45): for arbitrarily large constants $c_1 - c_5$ the likelihood integral is not positive-definite, although always converge to unity. Assuming the scaling relation of Eq. (51), for instance, the condition $c^{ij} < 1$ will ensure that the higher order terms are not dominating over the lower terms, as long as the scaling constants are of order unity. Basing upon the current understanding of the matter clustering, we expect the condition of weak non-Gaussianity to hold for scales ranging from $\sim 30h^{-1}$ Mpc to the horizon scale.

Acknowledgments

It is very likely that the completion of this work would have been much more difficult, if possible at all, without the crucial suggestions of Albert Stebbins, and the useful discussions with Stéphane Colombi and Scott Dodelson. I thank them all. This work has been supported by DOE and NASA under grant NAGW-2381. I also acknowledge financial support from CNR (Italy).

References

Amendola L. 1994 Ap. J. , 430, L9

Chambers J. 1967, Biometrika 54, 367

Efstathiou G., Bond J.R. & White S.D.M. 1992 Mon. Not. R. Ast. Soc. , 258, 1P

Falk T., Rangarajan R., & Srednicki M. 1993 Ap. J. , 403, L1

Gangui A., Lucchin F., Matarrese S. & Mollerach S. 1994, Ap. J. in press

Hinshaw G. *et al.* Ap. J. , 431, 1

Juszkiewicz R., Weinberg D. H., Amsterdamski P., Chodorowski M. & Bouchet F. 1993, preprint (IANSS-AST 93/50)

Kendall M., Stuart, A., & Ord J. K., 1987, Kendall's Advanced Theory of Statistics, (Oxford University Press, New York)

Kofman L. & Bernardeau, F. 1994, preprint IFA-94-19

Kolb E. W. & Turner M. 1989, The Early Universe (Addison Wesley, Reading)

Luo X. & Schramm D.N. 1993 Phys. Rev. Lett. , 71, 1124

Matsubara T. 1994, preprint UTAP-183/94

McCullagh P. 1984, Biometrika, 71, 461

Peacock J.A., 1991, Mon. Not. R. Ast. Soc. , 253, 1P

Peebles P.J.E., 1981, The Large Scale Structure of the Universe (Princeton University Press, Princeton)

Figure caption

Fig. 1 *a)* Plot of $M(\chi_0)$ as a function of χ_0^2/N and of the dimensionless kurtosis γ_2, for $\gamma_1 = 0, N = 10$. For $\gamma_2 = 0$ we return to the usual χ^2 cumulative function. Notice how for large kurtosis γ_2 the cumulative function $M(\chi_0)$ develops minima and maxima, indicating that the MEE is breaking down. *b)* Contour levels of $M(\chi_0)$ corresponding to $M = .01, .1, .2, .3, .7, .8, .9, .01$, from left to right. Notice how the limits for χ_0 broaden for increasing γ_2.

Fig. 2 *a)* Same as in Fig. 1*a*, now with more data, $N = 100$. *b)* Contour levels of $M(\chi_0)$ for the same values as in Fig. 1*b*. The CR is now much smaller than previously.

Fig. 3 *a)* Same as in Fig. 1*a*, now with $\gamma_2 = 0$, $N = 10$, and varying γ_1. *b)* Contour levels of $M(\chi_0)$ for the same values as in Fig. 1*b*.

Fig. 4 *a)* Same as in Fig. 1*a*, now with $\gamma_2 = 0$, $N = 100$, and varying γ_1. *b)* Contour levels of $M(\chi_0)$ for the same values as in Fig. 1*b*.

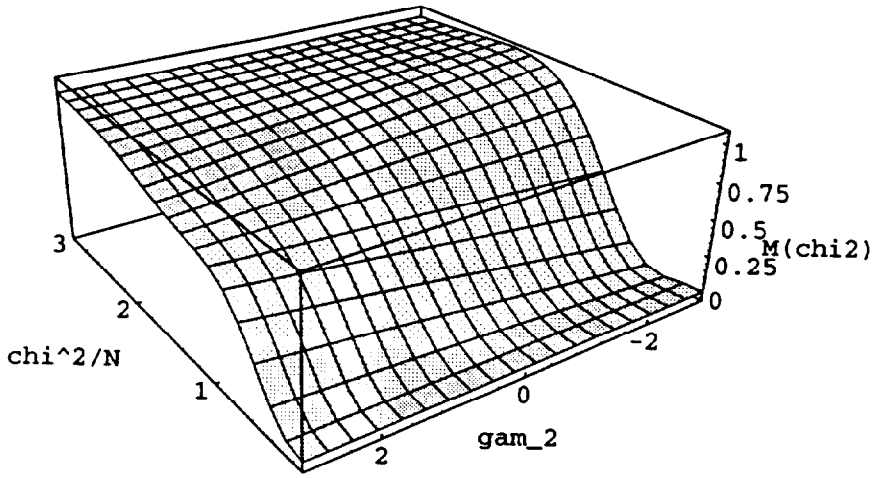
1
0.75
0.5
0.25
0
M(chi2)
3
2
1
chi^2/N
-2
0
2
gam_2

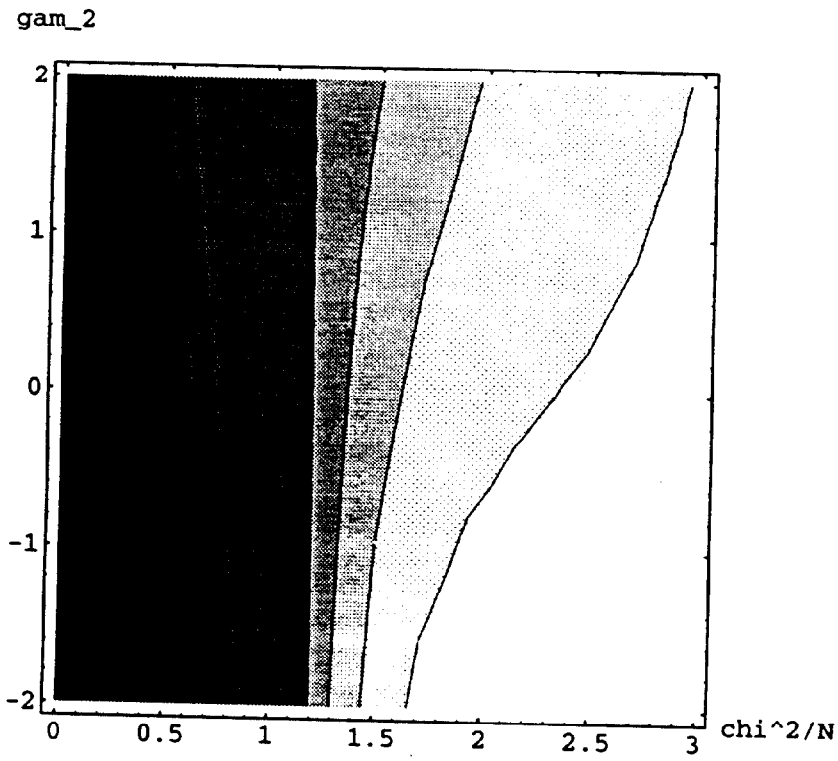
gam_2
2
1
0
-1
-2
0
0.5
1
1.5
2
2.5
3
chi^2/N

Fig. 1 a,b

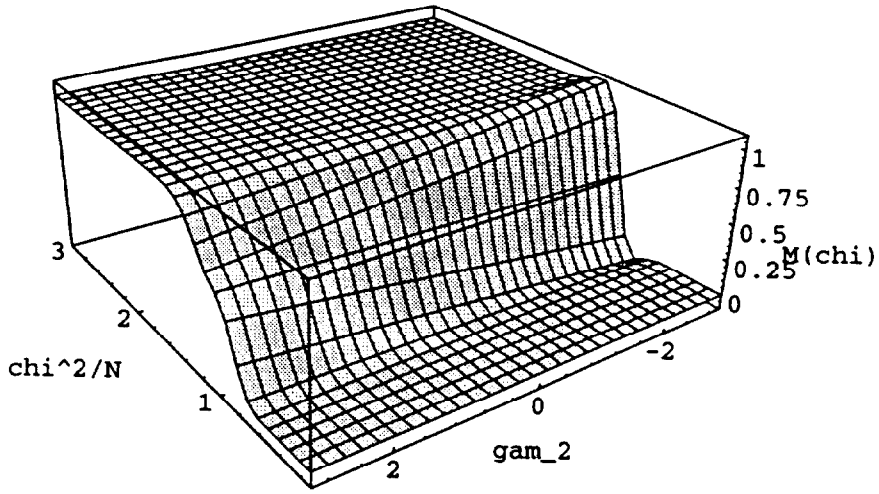
1
0.75
0.5
0.25
0
M(chi)
3
2
1
chi^2/N
-2
0
2
gam_2

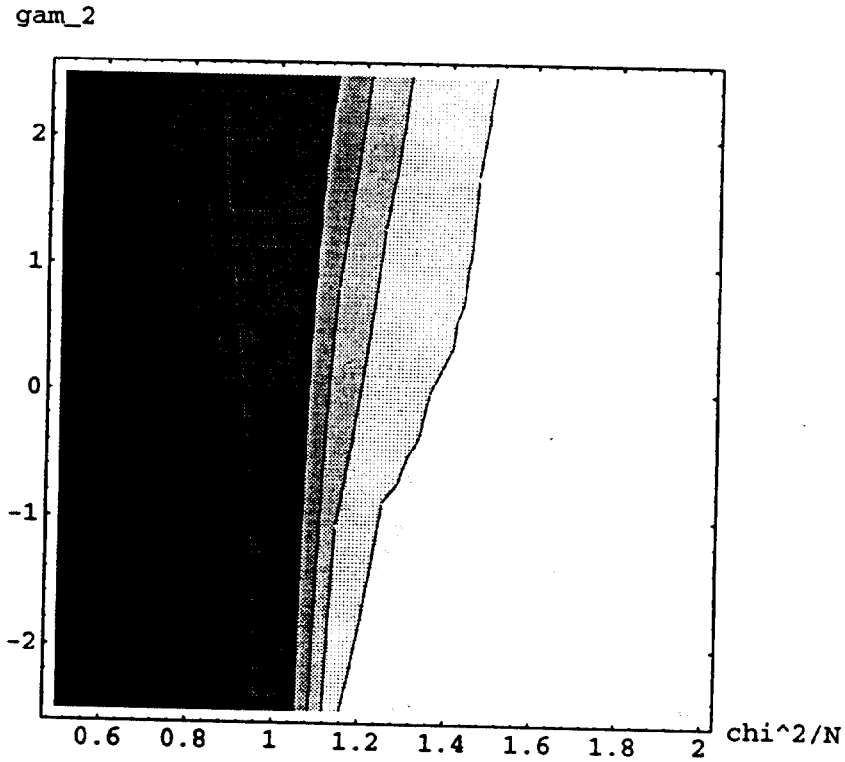
gam_2
2
1
0
-1
-2
0.6
0.8
1
1.2
1.4
1.6
1.8
2
chi^2/N

Fig. 2 a,b

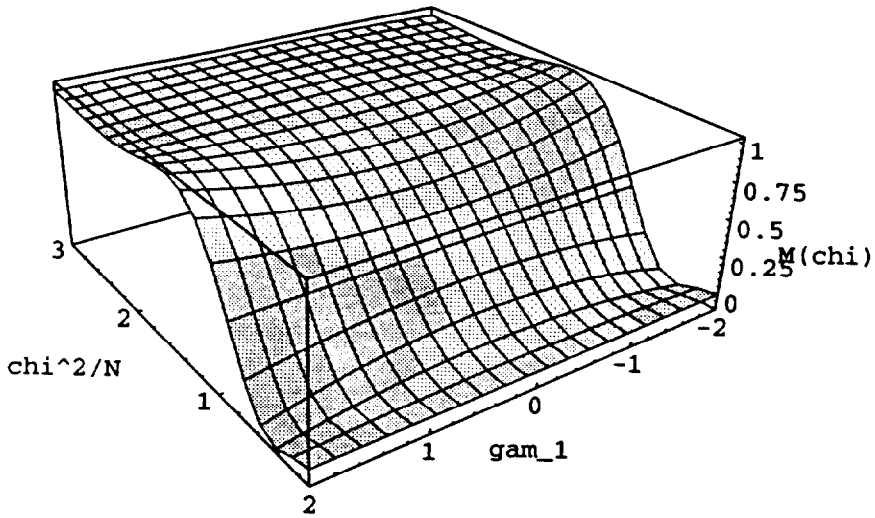
1
0.75
0.5
0.25
M(chi)
0
3
2
chi^2/N
1
2
-2
-1
0
1
gam_1

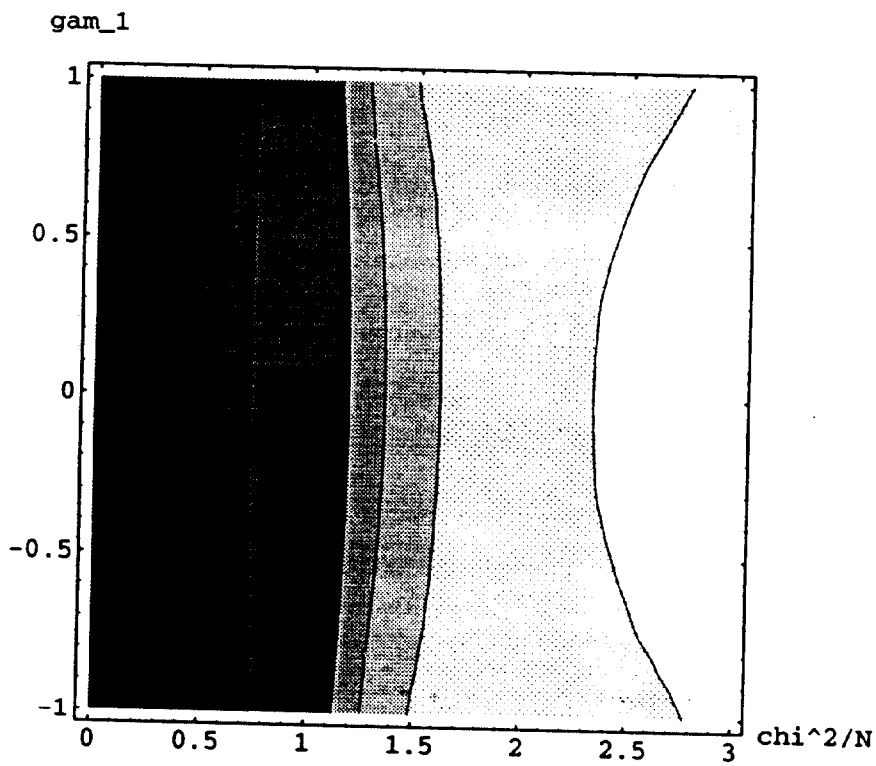
gam_1
1
0.5
0
-0.5
-1
0
0.5
1
1.5
2
2.5
3
chi^2/N

Fig. 3 a,b

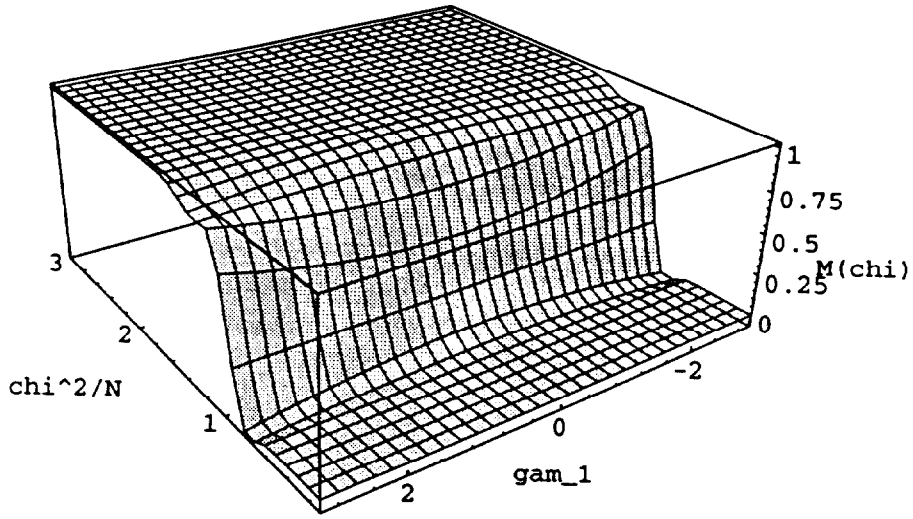
1
0.75
0.5
0.25
0
M(chi)
3
2
1
chi^2/N
-2
0
2
gam_1

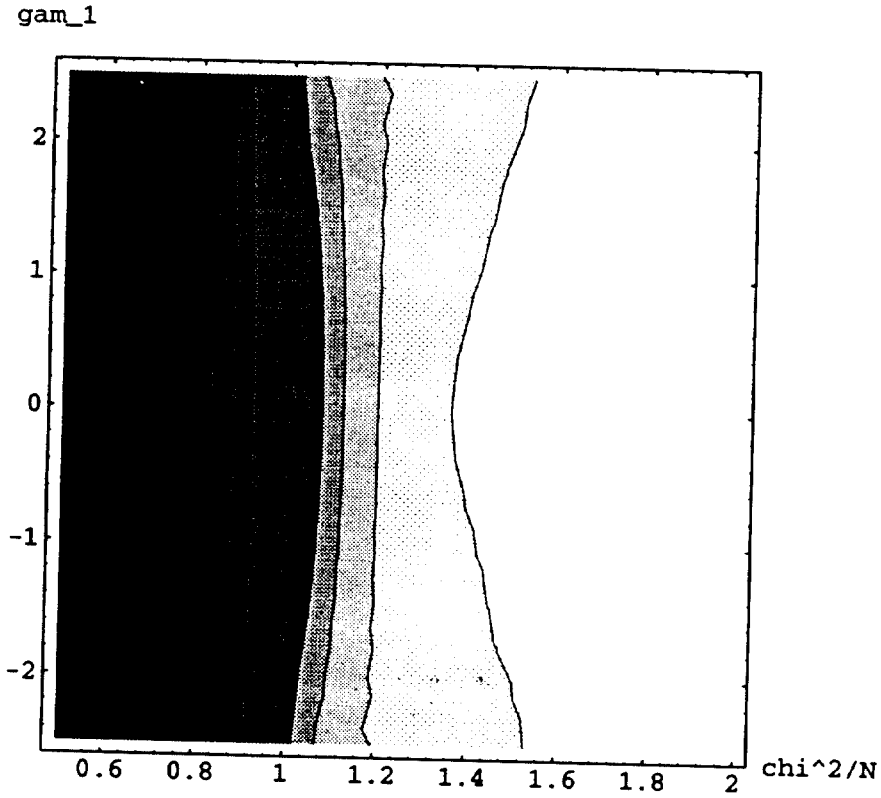
gam_1
2
1
0
-1
-2
0.6
0.8
1
1.2
1.4
1.6
1.8
2
chi^2/N

Fig. 4 a,b