SCINTILLATING FIBER OUTER TRACKING DETECTOR

Fiber Tracking Group (FTG)

B.Abbot[k], D.Adams[l], M.Adams[c], E.Anderson[m], T.Armstrong[i], M.Atac[a,b], A.Baumbaugh[b], B.Baumbaugh[g], P. Besser[n], M.Binkley[b], F.Bird[o], J.Bishop[g], N.Biswas[g], A.D.Bross[b], C.Buchanan[a], N.Cason[g], R.Chaney[p], D.Chrisman[a], D.Cline[a], C. Collins[o], M.Corcoran[l], R.Davies[k], J.Elias[b], E.Fenyves[p], D.Finley[b], G.W.Foster[b], R. Fox[o], H.Goldberg[c], H.Hammack[p], A.Hasan[i], M. Hechler[o], S.Heppelmann[i], K.Hess[o], J.Jaques[g], J.Kauffman[j], R.Kehoe[g], C.Kelley[e], M. Kelly[g], C.Kennedy[m], V.Kenney[g], R.Kephart[b], D.Koltick[k], J.Kolonko[a], K.Kondo[q], J.Kubic[a], R.A.Lewis[i], R.Leitch[h], J.LoSecco[g], B.Lowery[p], J.Marchant[g], R.McCutcheon[m], R.McIlwain[k], S.Margulies[c], H.Mendez[c], F.Miere[d], H.Miettenen[l], R.Moore[i], R.J.Mountain[g], B.Oh[i], J.Orgeron[p], H.Paik[d], J.Park[a], J.Passaneau[i], K.Pennington[o], M.Petroff[n], J. Piles[o], A.Pla-Dalmau[b], C.Rivetta[b], R.Ruchti[g], R.Scalise[i], J.Schmitz[k], W.Shephard[g], E.Shibata[k], J.Skeens[l], G.A.Smith[i], J.Solomon[c], K.Takikawa[q], C. Talmadge[k], T.Thurston[o], S.Tkaczyk[b], W.Toothacker[i], Balamurali V[g], D.Vandergriff[h], K.Vasavada[d], R.Wagner[b],, M.Wayne[g], and J.Whitmore[i]

University of California at Los Angeles[a]
Fermi National Accelerator Laboratory[b]
University of Illinois at Chicago[c]
Indiana University - Purdue University at Indianapolis[d]
Massachusetts College of Pharmacy and Allied Health Sciences[e]
University of Notre Dame[g]
Oak Ridge National Laboratory[h]
Pennsylvania State University[i]
Philadelphia College of Pharmacy and Science[j]
Purdue University[k]
Rice University[l]
Rockwell International, Electro-Optical Center[m]
Rockwell International, Science Center[n]
Superconducting Super Collider Laboratory[o]
University of Texas at Dallas[p]
Tsukuba University[q]

Fred Bird

DESIGN CONCEPT

- SCINTILLATING FIBERS OF
  - 925 μm DIAMETER
  - PS/PTP/3HF (STANDARD MIX)
  - $\lambda \sim 530$ nm
  - (BICRON & KURARAY)
- WAVEGUIDE FIBERS OF
  - 1mm DIAMETER
  - PS ONLY (STANDARD)
  - (BICRON & KURARAY)
- PHOTODETECTORS:
  - VISIBLE LIGHT PHOTON COUNTERS (VLPC)
  - QE ~ 80% AT 565 nm.
  - OPERATE CRYOGENICALLY (6-9 K)
- MECHANICAL:
  - FIBERS FORMED INTO COHERENT RIBBONS
  - RIBBONS PLACED ON STABLE-BASE CYLINDERS OF CARBON FILAMENT/ ROHACELL STRUCTURE
  - SYSTEM IS HELD AND SUPPORTED FROM END RINGS
  - CRYOSTATS FOR VLPCs ARE PLACED OUTSIDE OF THE CALORIMETRY
- TRIGGER/DAQ:
  - OUTPUT IS DIGITAL
  - LEVEL 1 TRIGGERING IMPOSED IN ASIC TECHNOLOGY

DESIGN STRATEGY

- ALL CYLINDRICAL GEOMETRY $0 \leq |\eta| \leq 2.3$

  UNIFORMITY OF COVERAGE FOR

  TRACKING
  TRIGGERING
  MECHANICAL SIMPLICITY

  INNER LAYERS FOR TRIGGERING AT LEVEL 1.

  OUTER LAYERS FOR MOMENTUM RESOLUTION

- EXPLOITS: INTRINSICALLY PROMPT RESPONSE OF SCINTILLATOR TO BE SENSITIVE TO INDIVIDUAL BEAM CROSSINGS

  HIGH GRANULARITY/LOW OCCUPANCY TO PROVIDE OPERATION TO 10^{34} LUMINOSITY

Table 4-23
Average occupancies at SSC design luminosity.

Superlayer	Radius (cm)	$\Delta\eta$ coverage	Occupancy
B1	60.0	2.3	0.017
B2	76.0	2.3	0.013
B3	92.0	2.3	0.012
B4	108.0	2.1	0.006
B5	136.0	1.9	0.003
B6	165.0	1.7	0.002

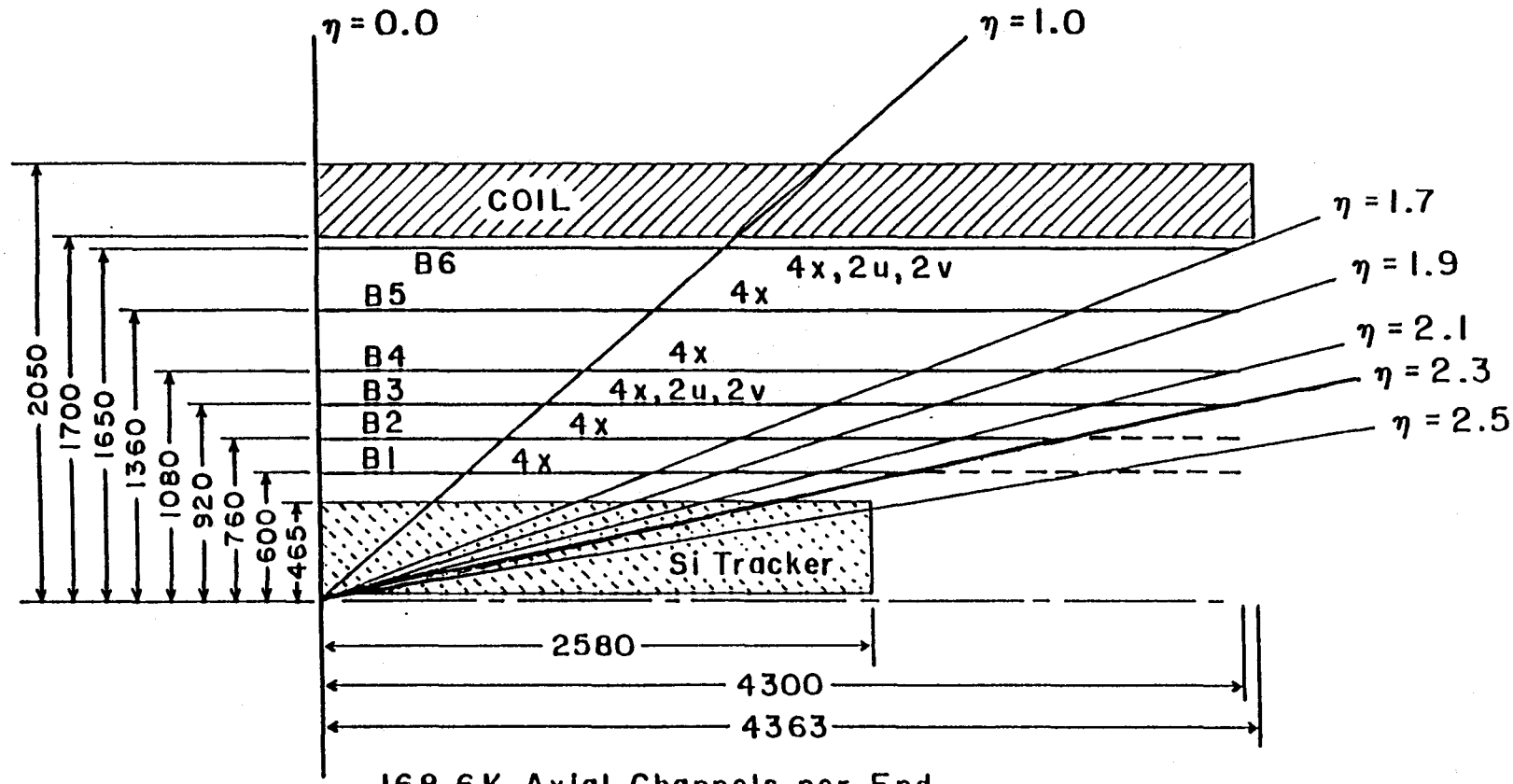

168.6K Axial Channels per End
68.0K Stereo Channels per End
473.2K Total Channel Count

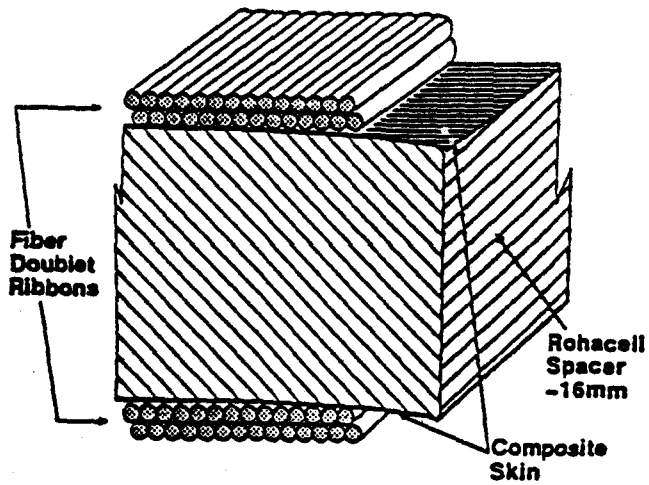

FIG. 4-58. Schematic of a superlayer having axial fiber doublet ribbons mounted on the inner and outer surfaces of a support cylinder.

Table 4-21
Parameters and characteristics of the superlayers of the scintillating fiber tracker.

Radial location (cm)	Fiber layers x=axial u=stereo v=stereo	Fiber channels per end	Scifi length for axial fibers (m)	$\Delta\eta$ coverage	Wave-guide length (m)	Total fiber length (m)	Expected mean no. of photo-electrons detected for 925 μm diam. (at $\eta = 0$)
60	$2x, 2x$	15.9K	3.00	2.3	6.93	9.93	4.6
76	$2x, 2x$	20.1K	3.65	2.3	6.12	9.77	4.6
92	$2x, 2x$	24.4K					
	$2u, 2v$	24.4K	4.30	2.3	5.31	9.61	4.5
108	$2x, 2x$	28.6K	4.30	2.1	5.15	9.45	4.6
136	$2x, 2x$	36.0K	4.30	1.9	4.87	9.17	4.7
165	$2x, 2x$	43.6K	4.30	1.7	4.58	8.88	4.9
	$2u, 2v$	43.6K					

TOTAL 473.2K

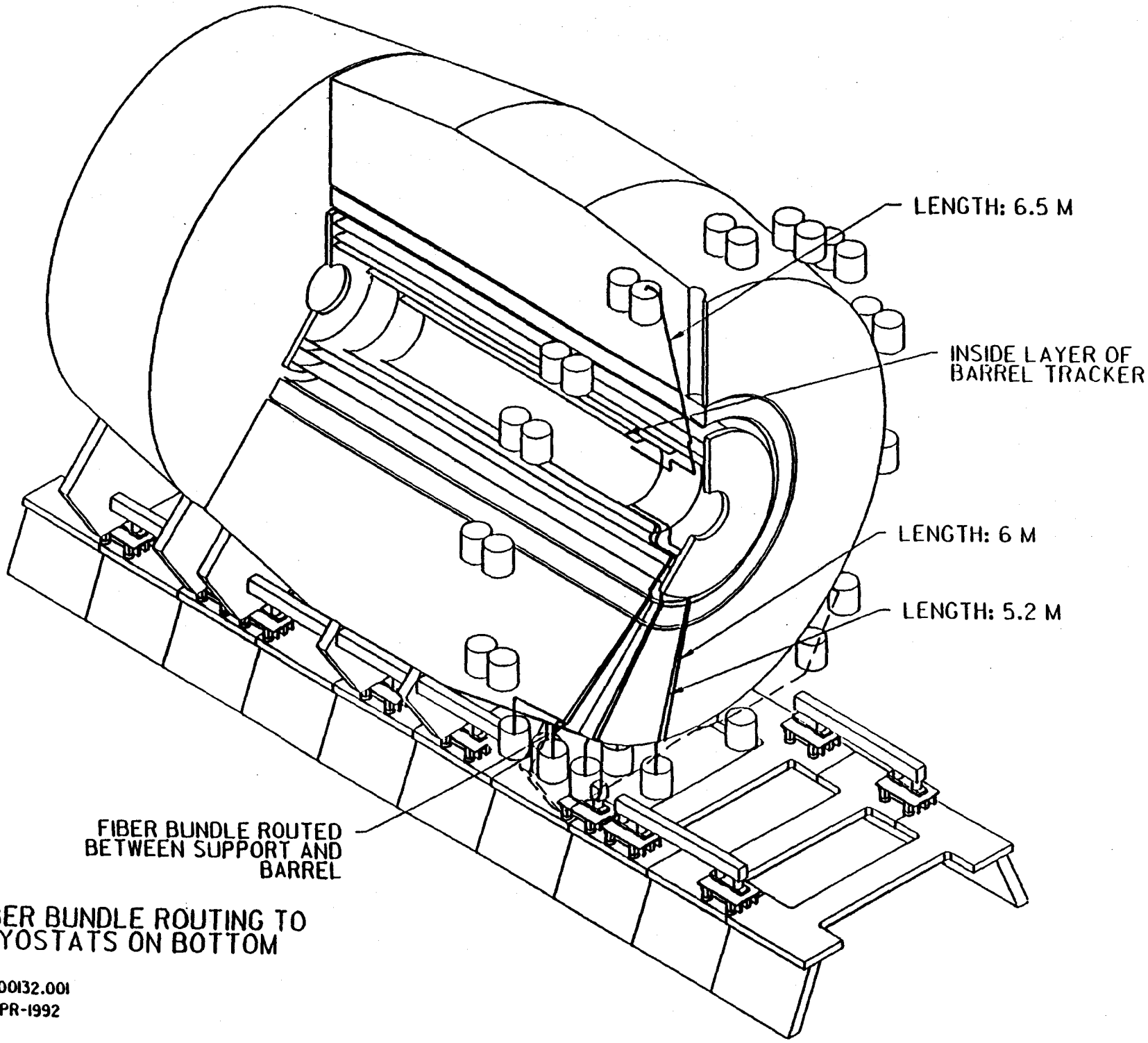

FIBER BUNDLE ROUTING TO CRYOSTATS ON BOTTOM

SDD00132.001
01-APR-1992