Fermi National Accelerator Laboratory

FERMILAB-Conf-91/143

# An Engineering Design Study of Dipole Magnet Cold Mass End Shell for the Superconducting Super Collider*

K. K. Leung, J. Jayakumar
*Superconducting Super Collider Laboratory*
*2550 Beckleymeade Avenue*
*Dallas, Texas 75237*

J. Strait
*Fermi National Accelerator Laboratory*
*P.O. Box 500*
*Batavia, Illinois 60510*

Operated by Universities Research Association Inc. under contract with the United States Department of Energy

# AN ENGINEERING DESIGN STUDY OF DIPOLE MAGNET COLD MASS END SHELL FOR THE SUPERCONDUCTING SUPER COLLIDER

K.K. Leung, J. Jayakumar (1), J. Strait (2)

SSC Laboratory - Dallas - TX (1)

Fermi National Accelerator Laboratory - Batavia - IL (2)

## ABSTRACT

The SSC dipole magnets are the major component of the SSC accelerator. The 50 mm collider dipole cold mass shell is a pressure vessel. The design and operating of the dipole magnet must first consider the safety, the area of no compromise (ref. 1). The most critical stresses in the dipole shell are found in the end shell. The present analytical result indicates that the critical stresses can be reduced by employing an end yoke to support the end skin

The dipole shell is not only designed as a pressure vessel, but also designed as a pre-loading device for obtaining optimum performance of the superconducting dipole magnet. Therefore, an optimum design of the end shell is essential to minimize quench occurrence as well as to realize long term operational safety and reliability of the dipole.

The dipole skin, collar and yoke, can be designed to work together to reduce the following undesirable effects. (1) Reduction of the critical current density due to over-stressed coils, (2) Generating frictional heat due to the micro motion of the coils under Lorentz forces, (3) over straining of the conductor insulation leading to short circuit.

From pre-loading design point of view, the design objective for the dipole shell is to minimize the coil motion as well as local high stress within the coils and the insulations.

From the safety point of view, the stress limit for the shell must be kept within a low cycle fatigue limit with adequate margin of safety. The low cycle fatigue limit of the dipole skin, especially in the area of longitudinal seam welds, should be established in the 4.2 K thermal environment. Rigorous analyses and tests are needed to predict the adequate margin of safety. Past studies indicate that the critical skin stresses are located in the area where the body yoke "fall off" to the magnet ends. Various design modifications of the end skin were proposed to reduce the high local stresses (ref. 2, 5, 6)

Critical skin stresses found in the end skins can be minimized by utilizing an end yoke extending from the body yoke to the end plate. Effect of the field quality by adding the end yoke is not considered in the present analysis.

## INTRODUCTION

Functions of the dipole magnet skin are listed as follows:

(1) To perform as a pressure vessel,
(2) To provide axial and radial direction pre-loads to the collared coil,
(3) To serve as a rigid platform to integrate the coil and yoke assemblies.

The elastic skin pre-stress is produced in two steps: (a) Mechanical pre-stress; apply a "skin press" during seam welding to pre-load the skin to about 207 MPa (30 ksi), (b) Thermal pre-stress; optimize the geometrical, elastic, and thermal items on the yoke, skin and collar to attain the desirable coil stress. It is desirable to induce local plastic stress in the skin along the seam welds to produce uniform stress distribution over the entire length of the dipole magnet skin. Test results of the 40 mm dipole skin reveal that plastic strains exist in the longitudinal seam welds. The local plastic strains may be actuated by thermal contraction of the seam welds. Concerns about plastic strain are an important design consideration.

The skin pre-stresses on the shell are designed not only to overcome the Lorentz forces of the dipole, but also to close the yoke gap which is specified as a means to provide exact control of the coil deformation and stresses which are related to field quality. The essential skin stress analysis was performed on a 2-D section model. The model defines the yoke and the collared coil assembly in details including gaps between each part as shown in Fig.4. The maximum skin stress in the 2-D section, however, is not the maximum stress in the dipole shell. The maximum skin stresses are found in the end shell section. Under thermal loading, the end skin stress is two times that of the 2-D section stress. It can be expressed as "$\sigma = 1.98\ E * \Delta T * \Delta\alpha$"(ref. 6). This equation also suggests that the end skin stresses are independent of the skin thickness. Various design modifications of the end skin (ref. 2 & 5) were proposed to reduce the critical end shell stress. The present analytical results indicates that by using an end yoke with suitable thermal properties, we can effectively reduce the critical stresses.

## 3-D FINITE ELEMENT MODEL

A description of the end shell assembly is shown in Fig. 1. The finite element of the end shell assembly is shown in Fig. 2. The analysis was performed using ANSYS code (4.4 a +) on a VAX 6420 in the SSC Laboratory. The skin, end yoke, end plate, vessel head and the body yoke were modeled with STIF-73 shell elements. The interfaces of the end yoke to the skin is modeled with STIF-10 to account for "compression only" lap-joint. Nonlinear interface elements used for interference fit, and sliding frictions inside the end skin is under evaluation using STIF-52. The weldments for the end plate and vessel head enclosure are also included in the 3-D model for determining the connections stress.

Mechanical pre-stress on the skin is modeled as skin radial pressure of 6.897 MPa (1 Ksi). Thermal load is considered as thermal steady load with initial temperature at 300 K and cool down to 4.2 K. It is possible that thermal transient condition may exist during cool down of the cold mass. The skin stress in the transient state will be higher than in the steady state condition.

The yoke body was modeled including helium holes and bus cavities to account for local stiffeness effects on skin stress. The yoke is modeled for the horizontal split with no gap configuration. The model global status is listed as follows: Number of Element = 1982. Number of Nodes = 4758.
Imposed displacements = 1153. Number of Force = 1
Number of element pressure = 760.

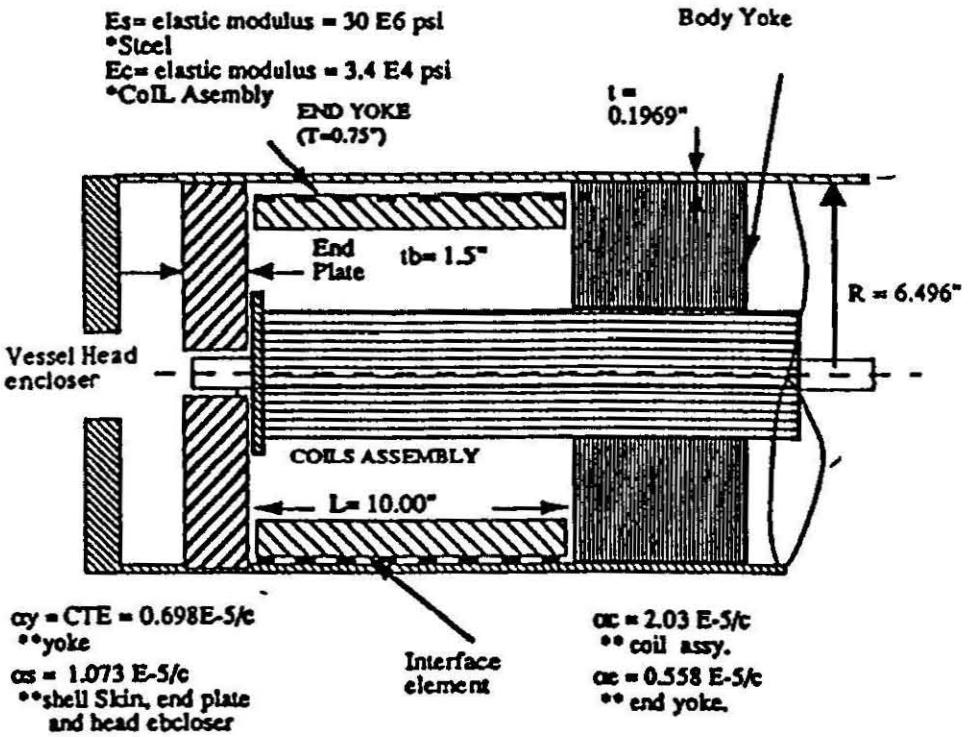


Fig. 1. 50 mm Dipole End Shell Assembly

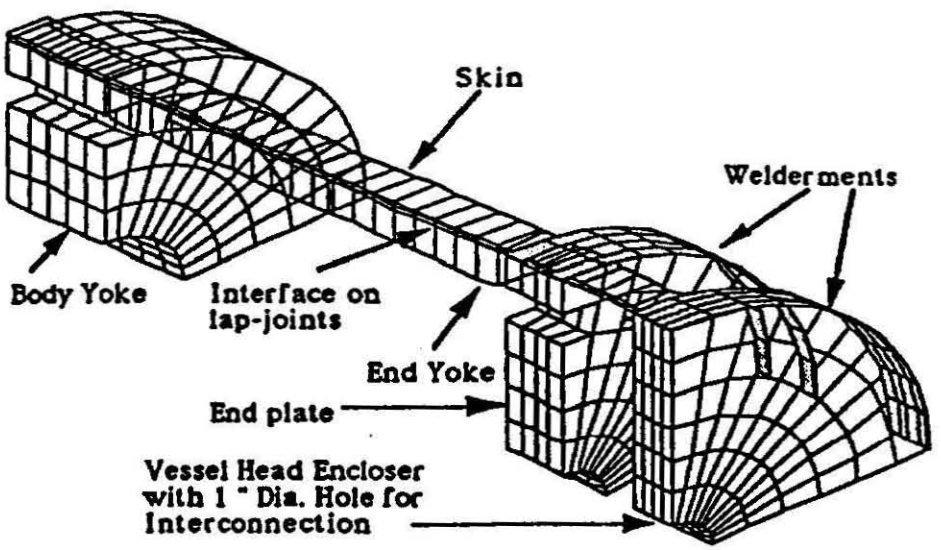


Fig. 2 50 mm Dipole End Shell Finite Element Model

## RESULTS OF 3-D ANALYSIS

The present 3-D model with the yoke as an annular plate can best be considered as a horizontal split yoke design with no gap. For a vertical yoke design with a initial gap in the split, the skin stress will be increased to a certain amount depending upon the specified ovality of the coil assembly. Fig. 4 and 5 present the skin stress of the 2-D section.

The loading condition for the 3-D model is listed as following:

(a) Thermal steady state load for cool down from 300 K to 4.2 K,
(b) Skin pre-stressed to 206.9 MPa (30 Ksi) by radial pressure,
(c) Axial pre-load to coil assembly by 84519 N (19000 lbs).

SIGE stress is used for the stress result. SIGE is the average stress of the skin calculated as combined elastic stresses according theory of failure. The stress state in the skin at time of failure normally is considered in full plastic state. Therefore, employing the SIGE, may be justified for the average stress approximation if low cycle fatigue failure occurs for ductile skin material. Stress at top and bottom over the thickness of the skin are considerably higher than the SIGE value and should be used for material shown lack of ductility.

The skin stress (SIGE) for the four cases are listed in the following:

(1) End skin without end yoke support.

Stress (SIGE) = 707 MPa ( 103 Ksi)

(2) End skin supported by end yoke with a soft interface.(solder)

Stress (SIGE) = 517 MPa (75 Ksi)

(3) End skin supported by end yoke with a welded interface. (weld)

Stress (SIGE) = 597 MPa (86.6 Ksi)

(4) End skin supported by end yoke and with a lap-jointed interface.

Stress (SIGE) = 613 MPa (89 Ksi)

The yield stress for 316 LN stainless steel at 4 K after 1000 cycles.is

Allowable stress = 896 MPa (130 Ksi) (Ref.4)

## 2-D FINITE ELEMENT SKIN STRESS ANALYSIS

The primary objective of the 2-D dipole stress analysis is to evaluate coil stress and deformation. Multi-field element (STIF-13) can be used to obtain the combined stresses from magnetic, thermal, and mechanical loadings. The 2-D analysis for a 40 mm dipole magnet is modeled with temperature-independent linear-elastic materials without frictional interfaces. Local bending resulted from the body yoke cavity have added some stresses to the total skin stresses. For the 50 mm dipole with end yoke design(ref. 4), relocating the bus cavity inward on the body yoke become necessary. The new design will greatly reduce the local bending stress on the skin.

The 2-D finite element model for the 40 mm dipole are shown in Figure 4, and 5. The 50 mm dipole 2-D section stress is under evaluation by engineers in the cold mass section of SSC magnet division.

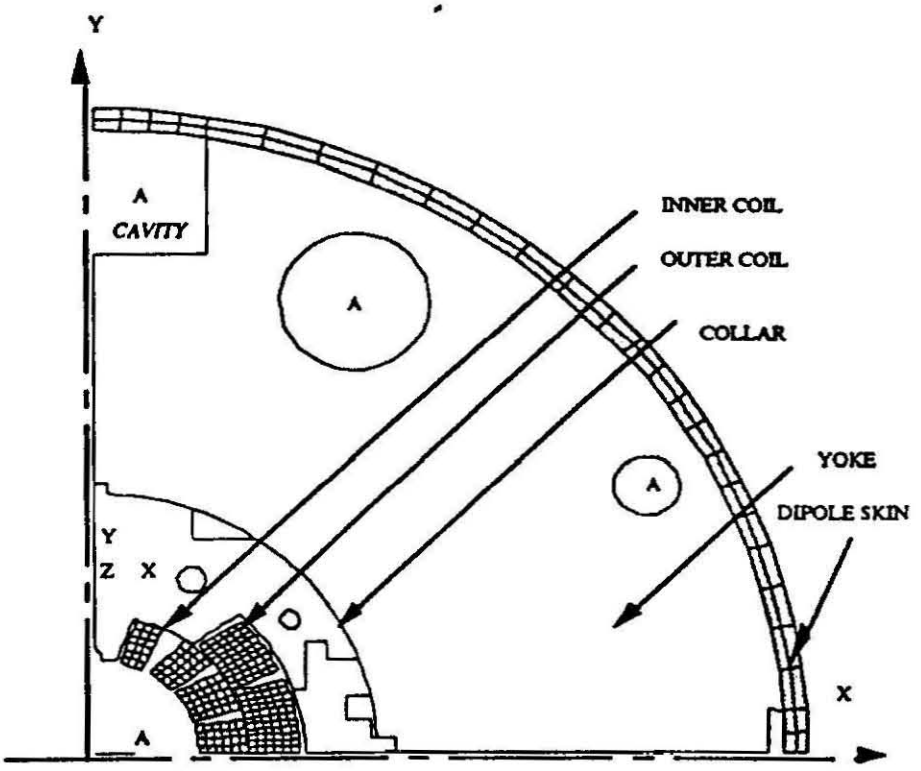


Multi field Elements STIF 13 are used to modeled the 2 - D section.
Elements at location A for air are omited in the figure for clarity.

FIGURE 4. FINITE ELEMENT MODEL FOR DIPOLE MAGNET 2 - D SECTION

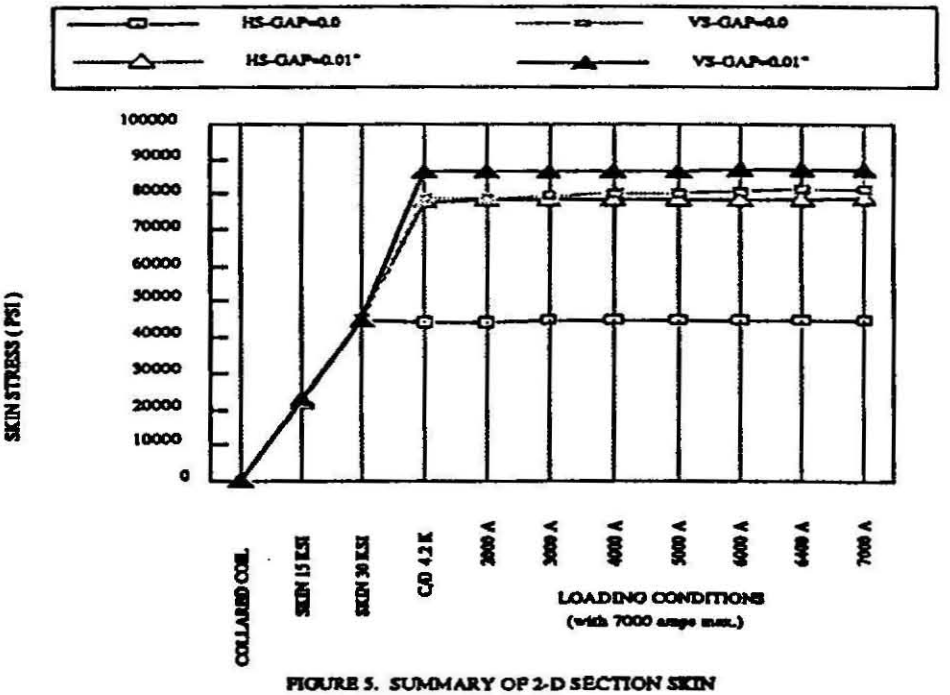


FIGURE 5. SUMMARY OF 2-D SECTION SKIN STRESSES FOR DIFFERENT YOKE/GAP DESIGN

## 3-D FINITE ELEMENT SKIN STRESS ANALYSIS

The 3-D finite element stresss is performed for the end skin assembly with or without the end yoke supporting the end skin. Design case 4 is shown in Fig. 5 and Fig. 6 for the radial deflection and skin stress distribution.

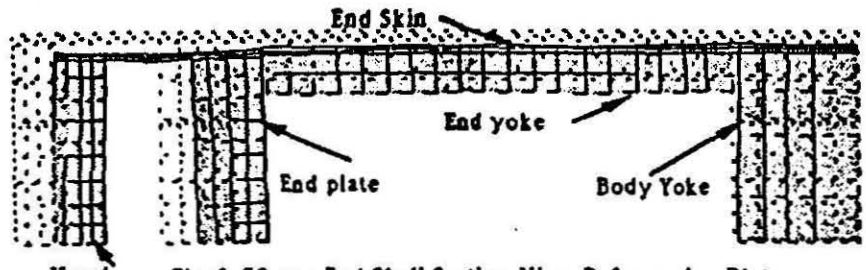


Fig. 6 50 mm End Shell Section View Deformation Plot.
(a) The maximum radial deflection on the skin is 1.143 mm (0.045") for the design case 4 with soft interface. For the design case 1 with no end yoke to support the end skin the maximum radial deflection on the skin is 4.62 mm (0.1827").
(b) The dotted lines represents undefromed section

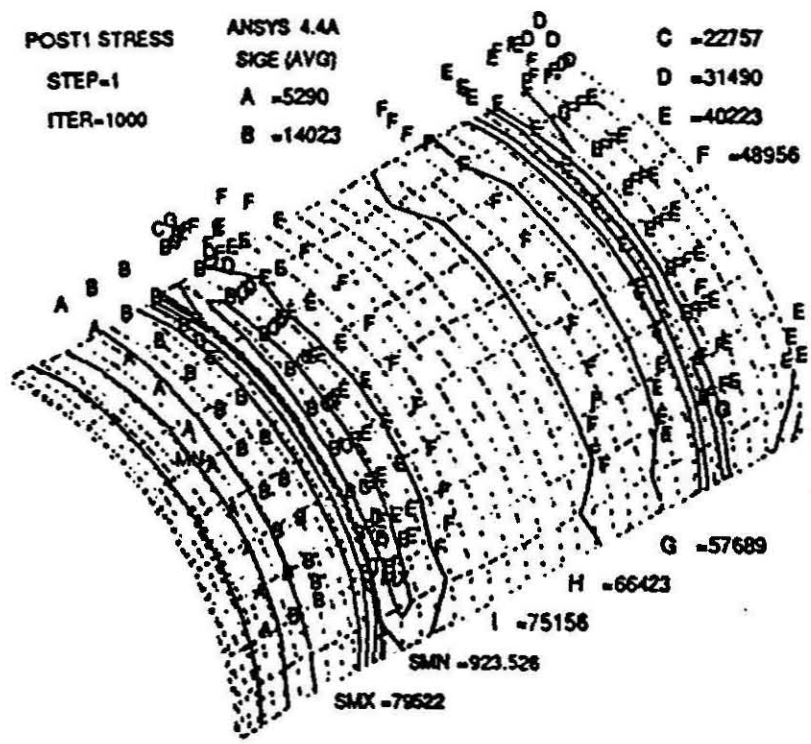


Fig. 7 Stress Distribution on End Skin ( Ksi ) for the Design Case 4 where the End Skin is Soldered to the End Yoke

## CONCLUSION

(1) Using soft interface to joint the end skin to the end yoke will reduce the critical end shell stress by 30% .

(2) The factor of safety is 1.73 for the soft interface design with the following conditions: 316 LN stainless steel as the dipole magnet skin material, and under 1000 operating cycles.

## DISCUSSIONS AND RECOMMENDATION

The followings are recommended for improvement of the dipole cold mass shell design and analysis.

(a) Margin of safety for the SSC dipole magnet needs to be established as no less than 1.5.

(b) Low cycle fatigue limit of the skin and the weldments at 4.2 K to 300 K. need to be established from dipole shell sample.

(c) Thermal transient temperature analysis and test data for the body yoke, end yoke and collared coil assembly need to be performed.

(d) Residual stresses and the stress distribution on the skin need to be evaluated. Confidence level of the uniformity the skin residual stresses and assembling process need to be established.

The 207 MPa (30 Ksi) skin pre-stress at room temperature as used for the present analysis, needs to be corfirmed for the latest 50 mm dipole design. External loadings including supporting post coefficient of thermal expansion, temperature and gravity load to the skin need to be included in the final analysis. Interconnection loadings, settlement or misaligment loadings are to be added to the end shell design. The present analysis indicating that using a flat encloser head with 2.54 cm (1.0") thickness and a 5 cm central hole produces a maximum flat head stress that is less than the end skin stress.

## REFERENCES

(1) R. Schwitters," SSC Laboratory General Meeting". Dallas Tx. Feb 4 1991.

(2) J. Jayakumar et. al. " Mechanical and Electromagnetic Analysis of 50 m m Design for the SSC Dipole ". Applied Superconductivity Conference, Snow Mass, Colorado, Sept. 1990.

(3) Jim Straight, "Yoke, Skin, and Magnet End Dimensions", Fermilab Laboratory Memo TS-SSC 90-035, June 28, 1990.

(4) T. Ogata, " Low Cycle Fatigue and Other Mechanical Properties of Aged 316 LN stainless Steel at Liquid Helium Temperature", HY - 05, ICMC 1989.

(5) K. K. Leung, " Dipole Magnet Shell Stress", Superconducting Super Collider Laboratory Report SSCL - N 705, June, 1990.

(6) K.K. Leung, "Thermal Stress on Dipole Magnet Vessel End Shell ", Superconducting Super Collider Laboratory Report SSCL - N 702, April, 1990.

This work was supported by the Director, Office of Engergy Research, Office of High Engey and Nuclear Physics, High Energy Physics Division, U. S. Department of Energy, under Contract No. DE-AC02-89ER40486.