THE GOOD FIELD SSC

Paul M. Mantsch

In the late spring of 1982, a summer study was held in Snowmass, Colorado, to ponder the national program for elementary particle physics and future facilities. At that watershed meeting a 20 TeV-on-20 TeV proton-proton superconducting collider was proposed as the next major research tool and studied seriously for the first time. The project gathered momentum and soon became part of the national science agenda. A detailed conceptual design has just been completed and awaits consideration by the Department of Energy and the Congress.

At Snowmass '82, and over the subsequent months, the feasibility of the new machine was examined and its major components studied in detail. Since the magnets of the main collider ring were the single most costly part of the project, magnet design became a major preoccupation. There seemed to be no limit to imaginative magnet design ideas proposed during those first few months. It wasn't long, however, before the Rocky Mountain High was sobered by hard reality. The vision of one-turn magnets hundreds of feet long assembled by robots in the tunnel faded as the sunset behind the snow-capped peaks.

It became clear that a device which would cost in the billions of dollars, built on an ambitious schedule, had to be based on proven concepts. Magnet designs began more and more to resemble those that were known and loved. The spectacular success of the TEVATRON had demonstrated the soundness of its magnet. The TEVATRON served, in fact, as a basis for much of the design of the new collider. Thinking at Brookhaven National Laboratory (BNL) was guided by the later, highly successful CBA designs. The magnet which was ultimately chosen for the Conceptual Design is really a synthesis of the best features of early designs adapted to the special requirements of the new machine.

Magnet Design Criteria

Operating such a huge machine would be inconceivable without superconducting magnets. Yet even with magnets like those in the TEVATRON, such a machine would require more than half a giggawatt of electrical power for refrigeration. Cryogenic performance of the magnets, therefore, was emphasized from the beginning.

Since a collider is at full field most of the time (tens of hours), magnet ramps are infrequent and can be slow (tens of minutes). With eddy current heating minimal, the static heat load dominates the refrigeration requirement. The magnet cryostat must be, therefore, carefully designed to minimize the heat leak (perhaps ten times less than the TEVATRON). This requires that the cryostat have sufficient space to accommodate the necessary radiation shielding and long heat path support for the coil

system at liquid helium temperature. The resulting cryostat is significantly larger in cross section than that used in the TEVATRON.

Magnet aperture and length are obvious cost-sensitive design features. Of these, aperture has the greatest cost impact. Since the superconductor required at a given field level is proportional to the inside diameter of the coil, effort to reduce aperture while maintaining good field quality has a substantial payback. The conductor is a large part of the cost of a superconducting magnet. In the TEVATRON, for example, the superconductor cost constituted one-third of the total magnet cost.

Improvements to the superconductor itself can also reduce cost. Fortunately, superconductor technology was on the verge of a breakthrough in the current-carrying capacity of superconducting wire. It is now expected that the new conductor will carry 60% more current than that used in the TEVATRON. These improvements in conductor can be used either to increase the strength of the magnet field or to reduce the quantity of superconductor in the coil, both of which lead to overall cost reductions. To put the superconductor cost into perspective, one must realize that the reduction in cost of a foot of superconducting cable by one cent will save a million dollars on the cost of the machine.

Substantial savings can be accrued both in labor and materials by having fewer ends, i.e., longer magnets. Roughly 30% to 40% of the cost of a TEVATRON dipole was related to the ends. The curvature (sagitta) of a Superconducting Super Collider (SSC) dipole required to keep beam trajectory in the magnet is quite small (0.5mm sagitta per meter of dipole length). The only restriction on length, therefore, is that the magnets must be transportable from the manufacturer to the machine site.

Attention to the simplicity of the ends is important. The transition from magnet to magnet should be as smooth as possible. Cryogenic fluid passages and radiation shields should be straight with a minimum of welds. Ends built up in such a fashion are not only cheaper and more reliable, but cryogenically more efficient.

Magnet Design Evolution

Once the basic requirements for the SSC magnets became clear, groups at the national laboratories (BNL, Lawrence Berkeley Laboratory, and Fermilab) started magnet development programs. This work consisted primarily of improvements to designs already existing or under development.

An early proposal was to take advantage of the simplicity of iron-dominated superconducting magnets. These magnets (often called superferric) operate near the saturation point of iron (about 2T) where the field is shaped by the geometry of the

iron. The placement of conductors is therefore not critical and the rectangular coils are easy to support. It was originally hoped that magnets could be made on site to any convenient length, perhaps as long as 100 meters.

The Texas Accelerator Center (TAC) was set up to develop the concept of the superferric magnet. The final design, shown below, has two magnetically independent apertures in a common cryostat.

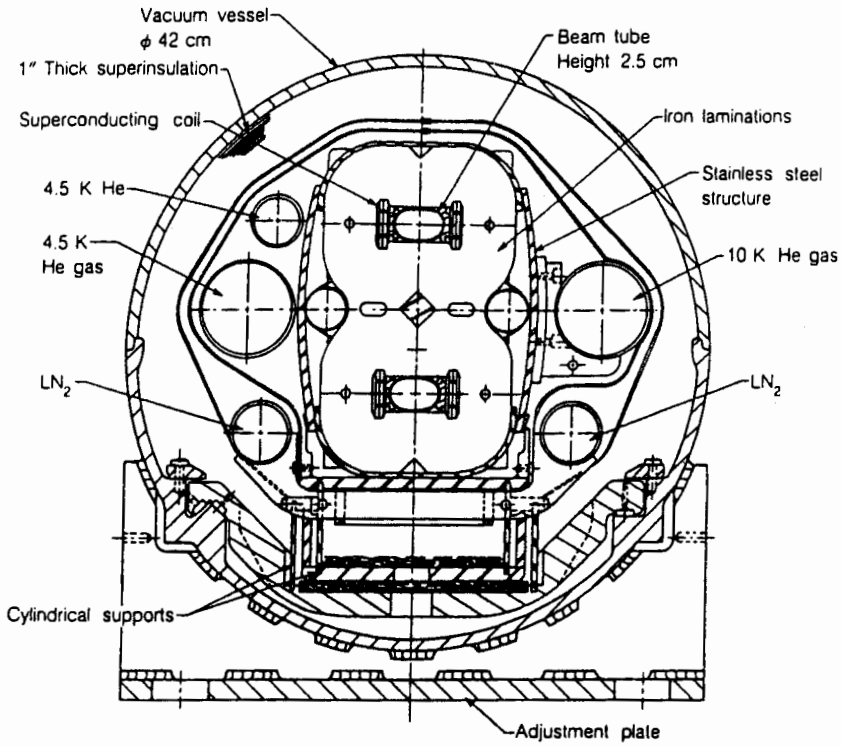

The two-in-one 3T superferric magnet.
(Source: SSC Central Design Group)

The operating field was raised to three tesla. Even though this field was well beyond the onset of saturation in iron, the required field quality was achieved by segmenting the coil into blocks with differing currents. Several models were built, including two that were 28 meters long.

The initial work at Lawrence Berkeley Laboratory (LBL) concentrated on developing a high field magnet (8-10 tesla) to be operated at a temperature of about 2 degrees kelvin (2K). The

technology of 2K cryogenic systems seemed sufficiently uncertain that emphasis shifted back to 4.5K designs. Later, LBL joined Brookhaven in an R&D collaboration.

At Brookhaven, a program was started to try to make use of the high current capability of niobium tin (NbSn) conductor in a magnet style based on successful work done on the CBA. A scheme having two magnetically coupled apertures was adopted. Although savings using NbSn were attractive, the mechanical properties of the conductor made the coil tricky to wind. In the interest of getting reliable large-scale models built on a timely schedule, the effort shifted back to the traditional niobium-titanium conductor. At about this time, LBL and BNL joined forces and undertook yet another refinement. Fermilab-style stainless steel collars were added to support the coils. In previous models, the coil had been supported directly by the yoke iron. The final BNL/LBL two-in-one magnet design is shown below.

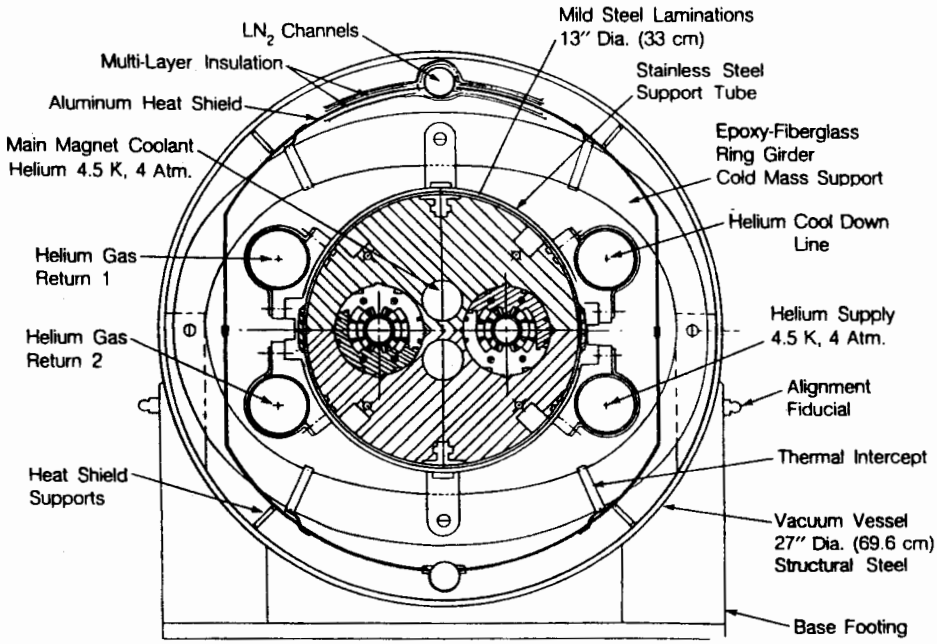

BNL/LBL two-in-one high-field magnet.
(Source: SSC Central Design Group)

After a brief study of superferric magnets, the Fermilab magnet designers concentrated on adapting the successful TEVATRON design to the task. The two-shell, helium-permeable, collared coil was taken as the starting point. The iron yoke and cryostat arrangements took many forms. An early decision was to design

one-aperture magnet so that the two rings would be magnetically and cryogenically independent. This seemed to be an imperative requirement both for viable accelerator operation and for an efficient cryogenic system. From a cryogenics standpoint, cold iron presented difficult problems. Also, the cryostat had to carry large diameter pipes. The solution was to use the vacuum vessel as a magnetic shield. The cryogenic piping and radiation shields could then be carried between the coil and the vacuum vessel. The "no-iron" design, pictured below, was compact, easy

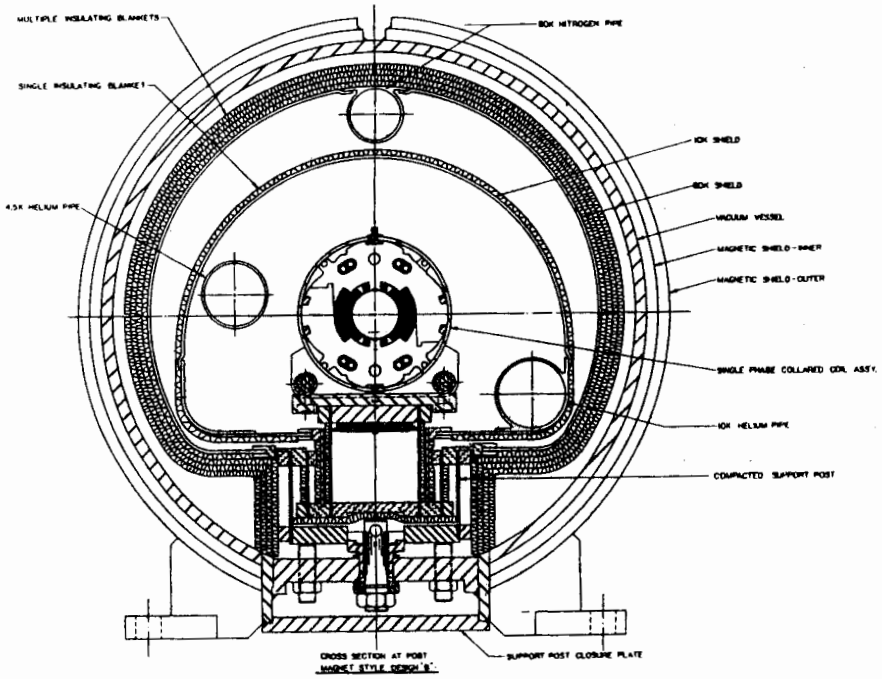

The Fermilab "no-iron" magnet.
(Source: SSC Central Design Group)

to fabricate, and avoided the problem of cold iron. One 12-meter no-iron model, with a dummy coil, was built to test the cryostat features, and another magnetic model, six meters long, was also constructed. These two models demonstrated the viability of the no-iron design. A great deal was also learned about general problems of low heat-leak cryostat design.

At this point (January of 1985) an agreement was entered into between Fermilab, LBL, and BNL to collaborate on a new magnet design incorporating some features of the LBL/BNL two-in-one cold-iron magnet and the Fermilab one-in-one design. The result-

ing magnet was a high-field (6.6T) one-in-one magnet with a collared coil surrounded by cold iron. The cryostat used for the Fermilab iron-free magnet was redesigned for the cold-iron magnet. The suspension for the coil is a folded-post type consisting of a series of fiberglass reinforced epoxy and stainless steel cylinders. The support is simple and strong, and yet has very low heat leak. The collaboration's design is shown below.

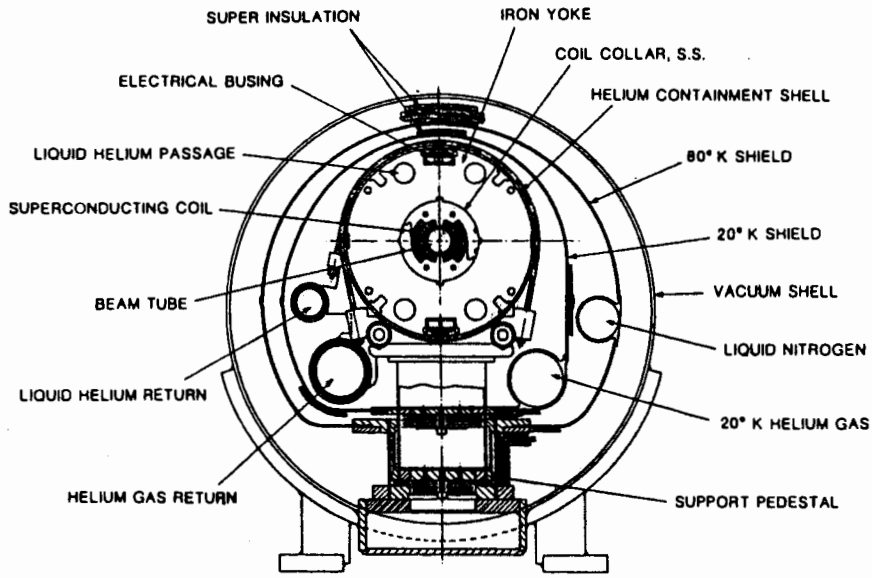

The LBL/BNL/Fermilab high field, one-in-one magnet design, chosen for the SSC Design Report. (Source: SSC Central Design Group)

Magnet Selection

The Central Design Group for what became officially known as the Superconducting Super Collider set a series of goals for the project. October 1985 was set as the goal for the selection of a magnet style. A magnet selection panel was chosen. Although there were nominally four magnet styles to choose from, only the LBL/BNL/Fermilab high-field cos θ magnet and the TAC superferric magnet were under serious consideration. Cost estimates were developed by the proponents for all of the magnet types. General Dynamics and Westinghouse prepared independent cost estimates. Total project costs were determined for each style to include tunnel costs for valid comparison.

After several days of presentations and discussion, the Magnet Selection Panel decided in favor of the high-field cosθ magnet. Their decision was based primarily on the proven success and experience with that magnet type. They also favored the argument that separate magnets for the two beams were preferable

for tractable operation of the machine. When the costs of cos θ and a one-in-one version of the superferric magnet were compared, there was little difference.

Future Plans

Once the magnet decision had been made, a program was started to build a series of full scale (16.6 meter) magnet models. Four models of the present design are currently under construction. The coils are being wound and assembled into magnet cold mass at Brookhaven. Fermilab will supply cryostats and will make the final assembly. The models will be individually tested at the Fermilab Magnet Test Facility and later in a string at a new enclosure at the E4 service building on the Fermilab Main Ring. The string test will exercise magnet-related systems as well as the magnets themselves. the first coil is expected from Brookhaven at the end of April. By the end of June, the first magnet should be ready for test. The next generation of models will include refinements as the design evolves. Over the coming year the magnet fabrication will be transferred to industry in anticipation of the first pre-production run of perhaps a hundred magnets.

The future of SSC depends on many considerations: scientific, technical, and, of course, political. When the decision is made to proceed, however, the magnets will be ready for the Good Field SSC.