Fermi National Accelerator Laboratory

FERMILAB-Pub-86/58-T
March 3, 1986

One Loop Operator Matrix Elements in the Unruh Vacuum

Christopher T. Hill

Fermi National Accelerator Laboratory
P.O. Box 500, Batavia, Illinois, 60510

Abstract

We present the details of a study of the matrix elements of local operators in the Unruh vacuum for real massive scalar fields in arbitrary d-spatial dimensions (also the Casimir effects for an infinite plane conductor). This state produces negative expectations for renormalized operators such as ϕ^2 and $T_{\mu\nu}$ with the structure of thermal corrections where the temperature is a *local* Hawking temperature. We trace this to the lack of precise boundary conditions for the theory on the horizon. Though the Minkowski vacuum appears to be populated with Rindler particles, it produces the general coordinate transform of the Minkowski results as dictated by general covariance. A simple corollary is that broken symmetries are not seen to be restored at large acceleration; the dynamical interpretation of this fact by the accelerating observer is surprising.

Operated by Universities Research Association Inc. under contract with the United States Department of Energy

I. Introduction

Coordinate systems possessing horizons lead to certain familiar ambiguities in the definition of a quantum field theory [1, 2]. One may consider a collection of observers comoving in such a coordinate system (tacked down to some fixed values of the spatial coordinates; such observers cannot all be freely falling; examples include the comoving observers in Schwarzscild, static deSitter and Rindler coordinates). We attempt to define a Hamiltonian, H_h, which propagates the Schroedinger wave-functionals in the observer's coordinate time on the horizon. However, the singularity in the coordinate system translates into ambiguities in the definition of the Hamiltonian density at the horizon and hence the Hamiltonian integral across the horizon.

These ambiguities do not occur if we *a priori* demand that the field configurations be everywhere continuous in coordinate systems that are continuous on the horizon (e.g. Minkowski or Kruskal coordinates in the case of a black hole). But the singularity in the coordinate system at the horizon does not allow us easily to implement this constraint in the general accelerated observer's system. In practice, the horizon is at a "coordinate infinity", while the basis functions for the D'alembertian operator have implicit boundary conditions, e.g. typically they are given an effective compact support (vanish at coordinate infinity so one can consider the modes to be effective gaussian wavepackets to have well-defined normalization integrals). Consequently, the theory is only well defined in the coordinate system in which the horizon does not represent a singularity. If one naively ignores this inherent loss of information in defining the quantum field theory, one is led to a different definition of the theory, with a different Hamiltonian and groundstate. We do not propose an alternative approach to this dilemma here, and it is in some sense an assumption in the discussion of Hawking radiation that this ambiguity is a fundamental limitation. However, we always assume that the physical groundstate is given in the coordinate system that is continuous, i.e. the Minkowski groundstate.

If one artificially severs continuity normal to some plane in flat space, i.e. neglect the $\nabla\phi \cdot \nabla\phi$ terms in the Hamiltonian on this surface, then the groundstate of the field theory will have different energy than the usual Minkowski vacuum. This

owes to the singular field configurations (whose normal derivatives to the plane are nonexistent) which previously had zero amplitude of being found in the vacuum now becoming active and establishing a new groundstate. This is the basis of the familiar Casimir effect. In fact, this is effectively what happens in the singular coordinate system and leads to the Unruh vacuum being physically distinct from the Minkowski case. The formal resemblance of the Unruh matrix elements to those of an infinite plane conductor in Minkowski space with Dirichlet boundary conditions are striking, and we have evaluated the latter (and Neumann conditions) as well, for comparison.

We consider a singular coordinate system in flat space describing a comoving ensemble of accelerated observers given by the coordinate transformation to "Rindler" coordinates [3, 4]:

$$t = a^{-1}\, e^{a\xi} \sinh(a\eta) \tag{1.1}$$

$$x = a^{-1}\, e^{a\xi} \cosh(a\eta) \qquad (x > 0) \tag{1.2}$$

$$x_\perp = x'_\perp \tag{1.3}$$

where $(-\infty < \eta, \xi < \infty)$. We will presently restrict our attention to the "right hand wedge" corresponding to $x > 0$, though it is straightforward to extend the results to the double wedge case. Eq.(1.3) describes observers of fixed ξ accelerating with proper acceleration given on the $t = \eta = 0$ time slice by $ae^{-a\xi} = 1/x$, and elapsed proper time $\eta e^{a\xi}$. The metric in Rindler coordinates is given by:

$$ds^2 = e^{2a\xi}(d\eta^2 - d\xi^2) - dx'^2_\perp \tag{1.4}$$

Presently we will adopt a covariant functional Schroedinger description of the system as developed in ref.(5). We refer the reader to ref.(5) for the formal details. An equivalent approach might be to construct the appropriate Green's functions [6] in the Unruh vacuum and extract local matrix elements from these.

As stated above, the physical vacuum is always the usual Minkowski one, and operator matrix elements simply transform covariantly to the accelerating frame. Thus, since $\langle\phi^2\rangle$ is zero (upon renormalization), it will always be measured to be zero by any observer. The novelty is that the Minkowski vacuum is not the groundstate of the Hamiltonian which propagates wave-functionals in Rindler time, η (rapidity); indeed, the groundstate of this object is the so-called "Unruh" vacuum. The

Minkowski vacuum appears to be full of Rindler particles in a coherent configuration when it is compared to the Unruh vacuum. Moreover, the particle number operator, *in momentum space*, which annihilates the Unruh vacuum has the expectation distribution of a Bose gas of temperature $\frac{a}{2\pi}$, where a is the dimensional parameter defining the Rindler coordinate system. This number operator is a globally defined object (in Rindler momentum space) and this result is symptomatic of the global ambiguities described above. We emphasize that the local operators are unambiguously defined and result in the usual covariant matrix elements when evaluated in the Rindler mode representation of the Minkowski vacuum. This explicitly verifies the covariance of the formalism of ref.(5).

However, if we compute local operator matrix elements, such as $\langle\phi^2\rangle$ in the Unruh vacuum, we find that they are not covariant transforms, but develop generally negative "thermal" corrections. For example, we show that $\langle\phi^2\rangle$ becomes $-\frac{T^2}{12}$ in an "high temperature limit" where T is the local Hawking temperature given in terms of the local proper acceleration (at $t = \eta = 0$ we have $T = \frac{1}{2\pi z}$). Thus, *it is the difference between the value of the operator in the Minkowski vacuum and that in the Unruh vacuum which appears as a positive thermal effect.*

This leads us to question the usual interpretation of acceleration radiation. Since all experiments are essentially local probes of physical systems (detectors, thermometers, etc.) and since the local operator matrix elements are just the covariant transformation of their Minkowski values, there will occur no observable effect in the vacuum as a consequence of acceleration. For example, if a field such as ϕ develops a vacuum expectation value associated with symmetry breakdown, then even accelerating observers should measure this value. Thus even at very high Hawking temperature there is no restoration of the broken symmetry. This raises an interesting dynamical paradox resolved in ref.(7) and herein (see Secition (III.B)) as to how the accelerating observer can conclude that the state is a minimum of the effective potential when it appears thermally excited relative to his definition of groundstate (the Unruh vacuum).

It should, however, be emphasized that this is the "alibi" point of view, whereas Unruh originally considered the "alias" viewpoint [2]: accelerated objects may indeed become thermalized as a consequence of the equipartition of the energy required to accelerate them by quantum mechanics. However, local physics is com-

pletely well defined by the Lagrangian dynamics of the lab observer. We emphasize this point in light of recent suggestions that the "Unruh effect" might be observable by rapid acceleration of electrons: one will only be testing the usual low energy theorems of QED (or general covariance!).

Our contribution in the present paper is to evaluate these matrix elements in a fully general real massive scalar field theory in $d+1$ spacetime dimensions. Analogous calculations have only been carried out previously for the "conformal" $T_{\mu\nu}$ in a massless theory in $3+1$ spacetime for an accelerated mirror [8]. These results become identical to ours in the high acceleration limit. The massive theory must be considered *in tota* due to infra-red singularities involving mass insertions. The mass terms are important for evaluating the effective potential in the Unruh vacuum, as discussed in Section III. We encounter a relatively arcane system of integrals in this study, i.e. the Kontorovich-Lebedev transform integrals of products of Bessel functions with respect to order. The Minkowski vacuum matrix elements involve tabulated Kontorovich-Lebedev transforms, while the Unruh vacuum expectation values involved a somewhat tedious analysis of an integral which can be given only in a quadrature. The high temperature limit reduces to simpler familiar results [8]. A number of other useful integrals are tabulated in Appendix A.

Section II contains the details of the matrix element evaluation. The casual reader who is only interested in some discussion of results should proceed to Section III.

II. Local Operator Matrix Elements

A. Evaluation of $\langle\phi^2\rangle$

Presently we compute $\langle\phi^2\rangle$ for a real scalar field of mass m in the Minkowski vacuum state, including the effects of a wall located at $x=0$ with Dirichlet or Neumann boundary conditions imposed upon ϕ, and in the Unruh vacuum for accelerating observers in the $+x$ direction. Because of the preferred axis in these problems and for lack of a better regulator in the Unruh case we will choose to point-split in the x direction. We will see that the infinities are unambiguous and that our subtraction procedure (or operator counterterms) is the same in both cases. The

matrix elements will differ by infra-red effects which have the superficial appearance of thermal terms, but which reflect the implicitly differing boundary conditions imposed upon the scalar field.

The Minkowski vacuum wave-functional can be written in momentum space, upon singling out the $x-$axis:

$$\Psi_M = \exp\left\{-\tfrac{1}{2}\int dk_x d^{d-1}k_\perp \mid \alpha(k_x,k_\perp)\mid^2 \sqrt{k_x^2+k_\perp^2+m^2}\right\} \tag{2.1}$$

where the $\alpha(k_x,k_\perp)$ are c-number Fourier coefficients in an expansion of the field configuration at any instant of time:

$$\phi(x) = \int_0^\infty dk_x \sqrt{\frac{2}{\pi}} \int \frac{d^{d-1}k_\perp}{(2\pi)^{\frac{d-1}{2}}} e^{ik_\perp\cdot x_\perp}\ \alpha(k_x,k_\perp) \begin{pmatrix} \sin k_x x \\ \cos k_x x \end{pmatrix} \begin{pmatrix} D \\ N \end{pmatrix} \tag{2.2}$$

(recall that in Schroedinger picture the fields are generalized coordinates and carry no time dependence, which is carried by the wavefunctional; we do not indicate the time dependence which is irrelevant presently; we are free to go to the Fourier coefficients as the coordinates of the system). Here we've indicated in the upper (lower) component the appropriate expansion for Dirichlet (Neumann) boundary conditions on the field at $x=0$ abbreviated as D (N). Note that the longitudinal momentum integrals range from $(0,\infty)$ while the transverse ($\perp$) integrations range from $(-\infty,\infty)$. For a real scalar field the coefficients satisfy the reality constraint, $\overline{\alpha(k_x,k_\perp)} = \alpha(k_x,-k_\perp)$.

Consider now the matrix element:

$$\begin{aligned}\left\langle \phi(x+\frac{\epsilon}{2})\phi(x-\frac{\epsilon}{2})\right\rangle = \int dk_x dp_x d^{d-1}k_\perp d^{d-1}p_\perp\ 2^{2-d}\pi^{-d} \\ \cdot \left\{ \begin{matrix} \sin k_x(x+\frac{\epsilon}{2}) \sin k_x(x-\frac{\epsilon}{2}) \\ \cos k_x(x+\frac{\epsilon}{2}) \cos k_x(x-\frac{\epsilon}{2}) \end{matrix} \right\} \\ \cdot \langle \alpha(k_x,k_\perp)\alpha(p_x,p_\perp)\rangle\ e^{ik_\perp\cdot x_\perp + ip_\perp\cdot x_\perp}\end{aligned} \tag{2.3}$$

The expectation value is to be taken in the wavefunctional of eq.(2.1). We have:

$$\begin{aligned}\langle \alpha(k_x,k_\perp)\alpha(p_x,p_\perp)\rangle &= \int D\phi\ \Psi_M^*(\phi)\alpha(k_x,k_\perp)\alpha(p_x,p_\perp)\Psi_M(\phi) \\ &= \frac{\delta(k_x-p_x)\cdot\delta^{d-1}(k_\perp-p_\perp)}{2\,(k_x^2+k_\perp^2+m^2)^{\frac{1}{2}}}\end{aligned} \tag{2.4}$$

The functional integral is most conveniently evaluated in momentum space: $D\phi \to \prod_k d\alpha_k d\overline{\alpha}_k$ (this requires some care in avoiding double counting in light of the the reality constraint on $\alpha(k_x, k_\perp)$ and there is also a $\delta(k_x + p_x)$ term which is inactive since $k_x, p_x > 0$). Thus, using eq.(2.4) we obtain:

$$\left\langle \phi(x+\frac{\epsilon}{2})\phi(x-\frac{\epsilon}{2}) \right\rangle = \int (2\pi)^{-d} dk_x d^{d-1}k_\perp \left(k_x^2 + k_\perp^2 + m^2\right)^{-\frac{1}{2}} \cdot \begin{Bmatrix} \cos\ k_x\epsilon - \cos\ 2k_x x \\ \cos\ k_x\epsilon + \cos\ 2k_x x \end{Bmatrix} \tag{2.5}$$

We now make use of the elementary integrals:

$$\int \frac{d^d k}{(2\pi)^d} \left(k^2 + m^2\right)^p = (4\pi)^{-\frac{d}{2}} (m^2)^{p+\frac{d}{2}} \frac{\Gamma(-p-\frac{d}{2})}{\Gamma(-p)} \tag{2.6}$$

and the d-dimensional solid angle:

$$\int d\Omega_d = \frac{2\pi^{\frac{d}{2}}}{\Gamma(\frac{d}{2})} \tag{2.7}$$

to perform the integration over $k_\perp$:

$$\left\langle \phi(x+\frac{\epsilon}{2})\phi(x-\frac{\epsilon}{2}) \right\rangle = \int_0^\infty dk_x\, 2^{-d-2}\pi^{\frac{-d-1}{2}} \Gamma(1-\tfrac{d}{2}) \left(k_x^2 + m^2\right)^{\frac{d-2}{2}} \cdot \begin{Bmatrix} \cos\ k_x\epsilon - \cos\ 2k_x x \\ \cos\ k_x\epsilon + \cos\ 2k_x x \end{Bmatrix} \begin{pmatrix} D \\ N \end{pmatrix} \tag{2.8}$$

Upon further use of:

$$\int_0^\infty \cos(xy)(x^2+a^2)^p dx = \left(\frac{y}{2a}\right)^{-p-\frac{1}{2}} \frac{\sqrt{\pi}}{\Gamma(-p)} K_{-p-\frac{1}{2}}(ay) \tag{2.9}$$

or equivalently:

$$\int_0^\infty dk_x (k_x^2+m^2)^{-1+\frac{d}{2}} \cos(k_x u) = \left(\frac{u}{2m}\right)^{\frac{1-d}{2}} \frac{\sqrt{\pi}}{\Gamma(1-\frac{d}{2})} K_{\frac{1-d}{2}}(au) \tag{2.10}$$

and some simplification we arrive at the result:

$$\left\langle \phi(x+\frac{\epsilon}{2})\phi(x-\frac{\epsilon}{2})\right\rangle = 2^{-d}\pi^{\frac{-1-d}{2}}$$
$$\cdot \begin{Bmatrix} \left(\frac{\epsilon}{2m}\right)^{\frac{1-d}{2}} K_{\frac{1-d}{2}}(m\epsilon) - \left(\frac{x}{m}\right)^{\frac{1-d}{2}} K_{\frac{1-d}{2}}(2mx) \\ \left(\frac{\epsilon}{2m}\right)^{\frac{1-d}{2}} K_{\frac{1-d}{2}}(m\epsilon) + \left(\frac{x}{m}\right)^{\frac{1-d}{2}} K_{\frac{1-d}{2}}(2mx) \end{Bmatrix} \tag{2.11}$$
$$\begin{pmatrix} D \\ N \end{pmatrix}$$

We note that the singularity of the operator ϕ^2 resides in the Bessel functions with arguments $m\epsilon$. The infra-red effects arise in the other terms and we note the change in sign upon passing from Dirichlet to Neumann boundary conditions. This result is, of course, equivalent to evaluating the Feynman propagator for spacelike interval with the indicated boundary conditions. We further note that in the Lorentz invariant vacuum without the presence of the wall at $x = 0$ we obtain the familiar result:

$$\left\langle \phi(x+\frac{\epsilon}{2})\phi(x-\frac{\epsilon}{2})\right\rangle_{Lorentz} = 2^{-d}\pi^{\frac{-1-d}{2}} \left\{ \left(\frac{\epsilon}{2m}\right)^{\frac{1-d}{2}} K_{\frac{1-d}{2}}(m\epsilon) \right\} \tag{2.12}$$

Clearly, the short distance singular part of eq.(2.11) is not influenced by the boundary conditions, and can be unambiguously subtracted in all coordinate systems.

Though the formalism developed in ref.(5) is covariant, it deserves verifying explicitly as a check on the present calculation. Therefore, we presently reexpress the Minkowski vacuum, $\Psi_M(\phi)$ in terms of the Rindler modes and recalculate the $\langle\phi^2\rangle$. We should obtain the same result as in eq.(2.11). An arbitrary field configuration can be represented in the right hand Rindler wedge in terms of massive $d+1$ dimensional Rindler modes as [5]:

$$\phi(x) = \int dk_x \frac{d^{d-1}k_\perp}{(2\pi)^{\frac{d-1}{2}}}\, \beta(k,k_\perp)\, e^{ik_\perp\cdot x_\perp}\, R_{k_x}(\varsigma) \tag{2.13}$$

where:

$$R_p^{k\perp}(\varsigma) = \frac{1}{\pi}\left(\frac{2p}{a}\sinh\frac{\pi p}{a}\right)^{\frac{1}{2}} K_{\frac{ip}{a}}(a^{-1}e^{a\varsigma}\sqrt{k_\perp^2+m^2}) \tag{2.14}$$

In terms of these modes the Minkowski vacuum restricted to the right hand Rindler wedge can be given for the two classes of boundary conditions. This is equivalent to a Bogoliubov transformation in the usual formalism and is given in ref.(5) as:

$$\Psi_M = \exp\left\{ -\frac{1}{2}\int dk_x d^{d-1}k_\perp \mid \beta(k,k_\perp) \mid^2 k_x \begin{pmatrix} \coth\left(\frac{\pi k_x}{2a}\right) \\ \tanh\left(\frac{\pi k_x}{2a}\right) \end{pmatrix} \right\} \tag{2.15}$$

Indeed, Ψ_M now appears as a state full containing a Bose gas of Rindler particles (irrespective of D or N conditions; the full Minkowski case is similar [5]) with a universal temperature of $T = \frac{a}{2\pi}$.

The matrix element is as before:

$$\begin{aligned}\left\langle \phi(x+\frac{\epsilon}{2})\phi(x-\frac{\epsilon}{2})\right\rangle = \int dk_x dp_x d^{d-1}k_\perp d^{d-1}p_\perp \; 2^{2-d}\pi^{-d} \langle \beta(k,k_\perp)\, \beta(p,p_\perp)\rangle \\ \cdot \left\{ R^{k_\perp}_{k_x}(\varsigma_1)\; R^{p_\perp}_{p_x}(\varsigma_2)\right\} e^{ik_\perp\cdot x_\perp + ip_\perp\cdot x_\perp}\end{aligned} \tag{2.16}$$

where now:

$$\begin{aligned}\langle \beta(k,k_\perp)\, \beta(p,p_\perp)\rangle &= \int D\phi\; \Psi^*_M(\phi)\; \beta(k,k_\perp)\; \beta(p,p_\perp)\Psi_M(\phi) \\ &= \frac{\delta(k_x-p_x)\cdot\delta^{d-1}(k_\perp-p_\perp)}{2k_x}\begin{Bmatrix} \tanh\frac{\pi k_x}{2a} \\ \coth\frac{\pi k_x}{2a}\end{Bmatrix}\end{aligned} \tag{2.17}$$

Here we note that ς_i corresponds to the $t = \eta = 0$ spatial Rindler coordinate corresponding to x_i.

Assembling the above results together and using elementary identities of hyperbolic trigonometric functions we arrive at the expression:

$$\begin{aligned}\left\langle \phi(x+\frac{\epsilon}{2})\phi(x-\frac{\epsilon}{2})\right\rangle = \int \frac{d^{d-1}k_\perp}{(2\pi)^{d-1}}\frac{du}{\pi^2}\, K_{iu}\left(m_\perp a^{-1}e^{a\varsigma_1}\right) K_{iu}\left(m_\perp a^{-1}e^{a\varsigma_2}\right) \\ \cdot \begin{Bmatrix} \cosh\,\pi u \; - 1 \\ \cosh\,\pi u \; + 1 \end{Bmatrix} \begin{pmatrix} D \\ N \end{pmatrix}\end{aligned} \tag{2.18}$$

where $u = \frac{k_x}{a}$.

We now make use of the Kontorovich-Lebedev transforms as discussed in ref.(9) and in Appendix A. The u–integration may be performed by use of eq.(A.1) to obtain:

$$\begin{aligned}\left\langle \phi(x+\frac{\epsilon}{2})\phi(x-\frac{\epsilon}{2})\right\rangle = \int \frac{d^{d-1}k_\perp}{(2\pi)^d} \\ \cdot \begin{Bmatrix} K_0(m_\perp a^{-1}(e^{a\varsigma_1}-e^{a\varsigma_2})) - K_0(m_\perp a^{-1}(e^{a\varsigma_1}+e^{a\varsigma_2})) \\ K_0(m_\perp a^{-1}(e^{a\varsigma_1}-e^{a\varsigma_2})) + K_0(m_\perp a^{-1}(e^{a\varsigma_1}+e^{a\varsigma_2})) \end{Bmatrix}\end{aligned} \tag{2.19}$$

where we use the "transverse mass":

$$m_\perp = \sqrt{k_\perp^2 + m^2}. \tag{2.20}$$

We now employ a standard Mellin Transformation:

$$\int_0^\infty dx\, x^{s-1}(x^2+\beta^2)^{-\frac{1}{2}\nu} K_\nu(a\sqrt{x^2+\beta^2}) = \\ a^{-\frac{1}{2}s}\, 2^{\frac{1}{2}s-1}\beta^{\frac{1}{2}s-\nu}\, \Gamma\left(\frac{s}{2}\right) K_\nu(\alpha\beta) \tag{2.21}$$

where in the present case $\nu = 0$ and $\beta = m$. Also, using the d-dimensional solid angle and letting $x_i = a^{-1}e^{a\xi_i}$ and $\epsilon = x_1 - x_2$, $2x = x_1 + x_2$, we find that we recover identically the result:

$$\left\langle \phi(x+\frac{\epsilon}{2})\phi(x-\frac{\epsilon}{2})\right\rangle_{M'} = 2^{-d}\pi^{\frac{-1-d}{2}} \left\{ \begin{array}{l} \left(\frac{\epsilon}{2m}\right)^{\frac{1-d}{2}} K_{\frac{1-d}{2}}(m\epsilon) - \left(\frac{x}{m}\right)^{\frac{1-d}{2}} K_{\frac{1-d}{2}}(2mx) \\ \left(\frac{\epsilon}{2m}\right)^{\frac{1-d}{2}} K_{\frac{1-d}{2}}(m\epsilon) + \left(\frac{x}{m}\right)^{\frac{1-d}{2}} K_{\frac{1-d}{2}}(2mx) \end{array} \right\} \tag{2.22}$$

of eq.(2.11). This confirms that our representation of the Minkowski vacuum in the two distinct boundary condition cases given in terms of the Rindler modes reproduces the invariant matrix element $\langle\phi^2\rangle$. In a sense, we have transformed the vacuum representation by the Bogoliubov transformation, and inverted the transformation in recovering the invariant result of eq.(2.11).

We now turn to the evaluation of $\langle\phi^2\rangle$ in the Unruh vacuum. This vacuum wave-functional is given in ref.(5) as:

$$\Psi_U = \exp\left\{-\frac{1}{2}\int dk_x d^{d-1}k_\perp \mid \beta(k,k_\perp) \mid^2 \mid k_x \mid\right\} \tag{2.23}$$

thus having the superficial appearance of a two-dimensional vacuum state for a massless field theory. This is shown in ref.(5) to be the groundstate of the Hamiltonian constructed in Rindler coordinates and propagating states in Rindler coordinate time.

To evaluate $\langle\phi^2\rangle_U$ we repeat the steps given above in eq.(2.16) but now we have:

$$\langle\, \beta(k,k_\perp)\, \beta(p,p_\perp)\rangle_U = \int D\phi\, \Psi_U^*(\phi)\, \beta(k,k_\perp)\, \beta(p,p_\perp)\Psi_U(\phi) \\ = \frac{\delta(k_x - p_x)\cdot\delta^{d-1}(k_\perp - p_\perp)}{2k_x} \tag{2.24}$$

Thus the analogue of eq.(2.18) becomes:

$$\left\langle \phi(x+\frac{\epsilon}{2})\phi(x-\frac{\epsilon}{2})\right\rangle_U = \int \frac{d^{d-1}k_\perp}{(2\pi)^{d-1}}\frac{du}{\pi^2}\, K_{iu}\left(m_\perp a^{-1}e^{a\zeta_1}\right) K_{iu}\left(m_\perp a^{-1}e^{a\zeta_2}\right) \cdot \{\sinh \pi u\} \tag{2.25}$$

The nontrivial part of this analysis is the evaluation of the resulting Kontorovich-Lebedev transformation. This is discussed in Appendix A, eq.(A.2). The left-over $k_\perp$ integration follows from the Mellin transform of eq.(2.21). We thus arrive at the result:

$$\begin{aligned}\left\langle \phi(x+\frac{\epsilon}{2})\phi(x-\frac{\epsilon}{2})\right\rangle_U = 2^{-d}\pi^{\frac{1+d}{2}} \Bigg\{ & \left(\frac{\epsilon}{2m}\right)^{\frac{1-d}{2}} K_{\frac{1-d}{2}}(m\epsilon) \\ & - 2\int_0^\infty \left\{\frac{\sqrt{x_1^2+x_2^2+2x_1x_2\cosh\omega}}{2m}\right\}^{\frac{1-d}{2}} \\ & \cdot K_{\frac{1-d}{2}}\left(m\sqrt{x_1^2+x_2^2+2x_1x_2\cosh\omega}\right)\frac{d\omega}{\pi^2+\omega^2}\Bigg\}\end{aligned} \tag{2.26}$$

The second term on the right-hand side is nonsingular in the $\epsilon \to 0$ limit and we thus are led to the result:

$$\begin{aligned}\left\langle \phi(x)^2\right\rangle_U = 2^{-d}\pi^{-\frac{1+d}{2}} \Bigg\{ & \left(\frac{\epsilon}{2m}\right)^{\frac{1-d}{2}} K_{\frac{1-d}{2}}(m\epsilon) \\ & - 2^{\frac{d+1}{2}} m^{d-1}\int_0^\infty \frac{d\omega}{\pi^2+\omega^2}\, Q^{\frac{1-d}{2}}\, K_{\frac{1-d}{2}}(Q)\Bigg\}.\end{aligned} \tag{2.27}$$

where:

$$Q = \sqrt{2}mx\,\sqrt{(1+\cosh\omega)}. \tag{2.28}$$

Thus, the singular structure is identical to that obtained above for the Minkowski, Dirichlet and Neumann results. The finite corrections are negative definite and analogous to those obtained for the Dirichlet case. This is not unreasonable mathematically since the Rindler mode functions oscillate infinitely as they approach the horizon, while all normalization integrals have effectively a compact support. As such, we are implicitly forcing the field configuration of eq.(2.13) to vanish at

the horizon by our normalization conventions and this in turn yields the result of eq.(2.27) not unlike the Dirichlet result.

Eq.(2.27) yields a more striking result when we consider it in a specific case. Let us specialize to $d = 3$ corresponding to $3+1$ dimensional spacetime. We further consider the limit of small x, the "high acceleration" limit. Throwing away the singular ϵ–terms we find the leading behavior:

$$\left\langle : \phi(x)^2 : \right\rangle_U \to -\frac{1}{4\pi^2 x^2}\int_0^\infty \frac{d\omega}{(1+\cosh\omega)(\pi^2+\omega^2)} = -\frac{T^2}{12} \tag{2.29}$$

where we define the *local Hawking Temperature* $T(x) = \frac{1}{2\pi x}$ where the local proper acceleration is given by $\frac{1}{x}$ (we have used the integral eq.(A.17) to obtain this latter result as well as the small argument limit of the Bessel function $K_1(x)$).

This result is *minus* the usual thermal correction to the operator ϕ^2 as is easily verified by computing the expectation value with the thermal density matrix. It suggests that locally the Minkowski vacuum expectation value, which is zero upon subtraction, is "hot" by an amount $\frac{T^2}{12}$ when compared to the Unruh result. Nonetheless, there is no conflict with general covariance because the result in Minkowski space is invariant, i.e. zero transforms into zero. *It would be incorrect to conclude that an accelerating observer measuring* $\langle\phi^2\rangle$ *obtains a thermal result of* $\frac{T^2}{12}$.

B. Evaluation of the Stress-Tensor

We turn now to the evaluation of the stress tensor in the various vacuum states described above. We focus presently upon the usual stress-tensor given by:

$$T_{\mu\nu} = \partial_\mu\phi\partial_\nu\phi - \frac{1}{2}g_{\mu\nu}\left(\partial_\rho\phi\partial^\rho\phi - m^2\phi^2\right). \tag{2.30}$$

We shall discuss below the conformal stress tensor given by:

$$T^c_{\mu\nu} = T_{\mu\nu} - \xi\left((\phi^2)_{;\mu;\nu} - g_{\mu\nu}(\phi^2)_{;\rho;}{}^{\rho}\right) \qquad \xi = \frac{(1-d)}{4}. \tag{2.31}$$

In Schroedinger picture the time derivative is replaced by the d–dimensional functional derivative:

$$\partial_0\phi(x) \to -i\frac{\delta}{\delta\phi(x)} \tag{2.32}$$

(we remark that this quantity transforms as a vector and the representations in terms of Rindler modes used below will automatically contain the Lorentz transformation to those coordinates). The component forms become in the Minkowski coordinates (we consider presently only those components which produce nonvanishing matrix elements) with the point split arguments:

$$\begin{aligned} T_{00} = &-\frac{1}{2}\frac{\delta^2}{\delta\phi(x_1)\delta\phi(x_2)} + \frac{1}{2}\nabla_x\phi(x_1)\nabla_x\phi(x_2) \\ &+ \frac{1}{2}\left(\vec{\nabla}_\perp\phi(x_1)\cdot\vec{\nabla}_\perp\phi(x_2) + m^2\phi(x_1)\phi(x_2)\right) \end{aligned} \tag{2.33}$$

$$\begin{aligned} T_{xx} = &-\frac{1}{2}\frac{\delta^2}{\delta\phi(x_1)\delta\phi(x_2)} + \frac{1}{2}\nabla_x\phi(x_1)\nabla_x\phi(x_2) \\ &- \frac{1}{2}\left(\vec{\nabla}_\perp\phi(x_1)\cdot\vec{\nabla}_\perp\phi(x_2) + m^2\phi(x_1)\phi(x_2)\right) \end{aligned} \tag{2.34}$$

$$\begin{aligned} T_{\perp\perp} = &-\frac{1}{2}\frac{\delta^2}{\delta\phi(x_1)\delta\phi(x_2)} - \frac{1}{2}\nabla_x\phi(x_1)\nabla_x\phi(x_2) - \frac{m^2}{d-1}\phi(x_1)\phi(x_2) \\ &+ \frac{1}{2}\left(\frac{3-d}{d-1}\right)\left(\vec{\nabla}_\perp\phi(x_1)\cdot\vec{\nabla}_\perp\phi(x_2) + m^2\phi(x_1)\phi(x_2)\right) \end{aligned} \tag{2.35}$$

where $_{\perp\perp}$ refers to any spatial direction perpenticular to x. We note that in flat space the point-split operator is a covariant bilocal, though in curved space there are necessary parallel transport factors associated with the split to maintain general covariance.

The computation of $\langle T_{\mu\nu}\rangle$ in the vacuum states with Dirichlet or Neumann conditions is straightforward. The only novelty is the computation of $\left\langle\frac{\delta^2}{\delta\phi(x_1)\delta\phi(x_2)}\right\rangle$ which we now sketch. In analogy with the expansion of eq.(2.13) we have the canonical momentum represented in terms of Rindler modes as the functional derivative:

$$-i\frac{\delta}{\delta\phi(x)} = -i\int dk_x\,\frac{d^{d-1}k_\perp}{(2\pi)^{\frac{d-1}{2}}}\,\frac{\delta}{\delta\beta(k,k_\perp)}\,e^{ik_\perp\cdot x_\perp}R_{k_x}(\varsigma) \tag{2.36}$$

Hence we have for $\left\langle\frac{\delta^2}{\delta\phi(x_1)\delta\phi(x_2)}\right\rangle$:

$$\int D\phi \Psi_U(\phi)^* \frac{\delta^2}{\delta\beta(k)\delta\beta(p)} \Psi_U(\phi) = -\frac{k_x}{2}\, \delta(k_x + p_x)\, \delta^{d-1}(k_\perp - p_\perp). \tag{2.37}$$

and factors of $\coth(\frac{\pi p}{2a})$ and $\tanh(\frac{\pi p}{2a})$ for the Dirichlet and Neumann cases respectively. Thus we obtain the expression, upon carrying out trivial integrations over delta functions:

$$\begin{aligned}\left\langle \frac{\delta^2}{\delta\phi(x_1)\delta\phi(x_2)} \right\rangle = & \frac{1}{2a\pi^2} \int dp\, \frac{d^{d-1}k_\perp}{(2\pi)^{d-1}} \sinh(\frac{\pi p}{a}) \cdot \\ & \left(p^2 K_{\frac{ip}{a}}(m_\perp x_1) K_{\frac{ip}{a}}(m_\perp x_2)\right)\end{aligned} \tag{2.38}$$

and $\cosh(\frac{\pi p}{a}) \pm 1$ replaces $\sinh(\frac{\pi p}{a})$ in the (D,N) cases above. The p integration may be performed by the use of eq.(A.16) in the Unruh case and eq.(A.14) and eq.(A.15) in the D and N cases. The $k_\perp$ integrals are those of eq.(2.21) which yields the results quoted in appendix B. The remaining matrix elements are similar, though somewhat tedious to evaluate. Rather than display the computations explicitly we quote the results and the interested reader may find all of the necessary technical ingredients collected into Appendix A and results quoted in Appendix B.

The results of Appendix B allow us to write for the renormalized canonical stress tensor:

$$\begin{aligned} T_{00} = & -2^{-d-1}\, \pi^{\frac{-1-d}{2}} \left(\frac{\epsilon}{2m}\right)^{\frac{-1-d}{2}} K_{\frac{-1-d}{2}}(m\epsilon) \\ & \mp 2^{-d-2}\, \pi^{\frac{-1-d}{2}} \left(\frac{x}{m}\right)^{\frac{-1-d}{2}} \\ & \quad \cdot \left\{-2(1-d) K_{\frac{-1-d}{2}}(2mx) + 4mx K_{\frac{1-d}{2}}(2mx)\right\} \qquad \begin{pmatrix} D \\ N \end{pmatrix} \\ & - 2^{\frac{-d-3}{2}}\, \pi^{\frac{-1-d}{2}} m^{1+d} \\ & \quad \cdot \int_0^\infty \frac{d\omega}{(\pi^2+\omega^2)} \left\{ (3d - 1 - (1-d)\cosh\omega)\, Q^{\frac{-1-d}{2}} K_{\frac{-1-d}{2}}(Q) \right. \\ & \quad \left. + ((3+\cosh\omega)Q^2 - 2\, P(\omega)(1+\cosh\omega)) Q^{\frac{-3-d}{2}} K_{\frac{1-d}{2}}(Q) \right\} \end{aligned} \tag{2.39}$$

and:

$$
\begin{aligned}
T_{xx} = & -2^{-d-1}\,\pi^{\frac{-1-d}{2}}\left(\frac{\epsilon}{2m}\right)^{\frac{-1-d}{2}}\left\{d\,K_{\frac{-1-d}{2}}(m\epsilon)+m\epsilon K_{\frac{1-d}{2}}(m\epsilon)\right\} \\
& +0 \qquad\qquad \begin{pmatrix} D \\ N \end{pmatrix} \\
& -2^{\frac{-d-3}{2}}\,\pi^{\frac{-1-d}{2}}m^{1+d} \\
& \quad\cdot\int_0^\infty \frac{d\omega}{(\pi^2+\omega^2)}\left\{(-d+3-(1-d)\cosh\omega)\;Q^{\frac{-1-d}{2}}K_{\frac{-1-d}{2}}(Q)\right. \\
& \quad\left.+((-1+\cosh\omega)Q^2-2\,P(\omega)(1+\cosh\omega))Q^{\frac{-3-d}{2}}K_{\frac{1-d}{2}}(Q)\right\}
\end{aligned}
\tag{2.40}
$$

and:

$$
\begin{aligned}
T_{\perp\perp} = & \;2^{-d-1}\,\pi^{\frac{-1-d}{2}}\left(\frac{\epsilon}{2m}\right)^{\frac{-1-d}{2}}K_{\frac{-1-d}{2}}(m\epsilon) \\
& \pm 2^{-d-2}\,\pi^{\frac{-1-d}{2}}\left(\frac{x}{m}\right)^{\frac{-1-d}{2}} \\
& \quad\cdot\left\{-2(1-d)K_{\frac{-1-d}{2}}(2mx)+4mxK_{\frac{1-d}{2}}(2mx)\right\} \qquad \begin{pmatrix} D \\ N \end{pmatrix} \\
& -2^{\frac{-d-3}{2}}\,\pi^{\frac{-1-d}{2}}m^{1+d} \\
& \quad\cdot\int_0^\infty \frac{d\omega}{(\pi^2+\omega^2)}\left\{(-3d+5+(1-d)\cosh\omega)\;Q^{\frac{-1-d}{2}}K_{\frac{-1-d}{2}}(Q)\right. \\
& \quad\left.+((-3-\cosh\omega)Q^2-2\,P(\omega)(1+\cosh\omega))Q^{\frac{-3-d}{2}}K_{\frac{1-d}{2}}(Q)\right\}
\end{aligned}
\tag{2.41}
$$

where Q and P are defined in eq.(B.3). *Here the lines containing the* $\begin{pmatrix} D \\ N \end{pmatrix}$ *symbol refer only to the Minkowski vacuum with Dirichlet or Neumann conditions.* The last lines in each formula containing the integral expression refer only to the Unruh case (do not add the former to the latter). We see that the short distance contributions are, as expected, universal and the differences between the various cases occur only in the infra-red. An alternate expression of the form:

$$
\langle T_{\mu\nu}\rangle = A\;g_{\mu\nu}+B\;\eta_\mu\eta_\nu+C\;\rho_\mu\rho_\nu \tag{2.42}
$$

is given in appendix B, in terms of the instantaneous surface normal vector, η_μ and the proper acceleration vector, ρ_μ.

The computation of the conformal stress tensor (here we mean that which occurs when the scalar is conformally coupled to curvature, but we generally include a mass term as well; the true tree approximation conformally invariant case occurs when the mass is taken to zero) involves additional operator expectation values. These are discussed and listed in Appendix B and may be assembled into final expressions for the conformal stress tensor:

$$
\begin{aligned}
T^c_{00} = & -2^{-d-1}\,\pi^{\frac{-1-d}{2}}\left(\frac{\epsilon}{2m}\right)^{\frac{-1-d}{2}} K_{\frac{-1-d}{2}}(m\epsilon) \\
& \mp 2^{-d-2}\,\pi^{\frac{-1-d}{2}}\left(\frac{x}{m}\right)^{\frac{-1-d}{2}} \frac{4mx}{d}\, K_{\frac{1-d}{2}}(2mx) \qquad \begin{pmatrix} D \\ N \end{pmatrix} \\
& - 2^{\frac{-d-3}{2}}\,\pi^{\frac{-1-d}{2}} m^{1+d} \\
& \cdot \int_0^\infty \frac{d\omega}{(\pi^2+\omega^2)} \Big\{ (d+1+(1-d)\cosh\omega)\; Q^{\frac{-1-d}{2}} K_{\frac{-1-d}{2}}(Q) \\
& + \Big(\Big(\frac{2+d}{d} + \frac{2-d}{d}\cosh\omega\Big) Q^2 - 2\,P(\omega)(1+\cosh\omega)\Big) Q^{\frac{-3-d}{2}} K_{\frac{1-d}{2}}(Q) \Big\}
\end{aligned}
\tag{2.43}
$$

and:

$$
\begin{aligned}
T^c_{xx} = & -2^{-d-1}\,\pi^{\frac{-1-d}{2}}\left(\frac{\epsilon}{2m}\right)^{\frac{-1-d}{2}} \Big\{ d\, K_{\frac{-1-d}{2}}(m\epsilon) + m\epsilon K_{\frac{1-d}{2}}(m\epsilon) \Big\} \\
& + 0 \qquad \begin{pmatrix} D \\ N \end{pmatrix} \\
& - 2^{\frac{-d-3}{2}}\,\pi^{\frac{-1-d}{2}} m^{1+d} \\
& \cdot \int_0^\infty \frac{d\omega}{(\pi^2+\omega^2)} \Big\{ \Big(-d+1+\frac{2}{d} - \Big(3-d-\frac{2}{d}\Big)\cosh\omega\Big)\; Q^{\frac{-1-d}{2}} K_{\frac{-1-d}{2}}(Q) \\
& + \Big((-1+\cosh\omega) Q^2 - 2\,P(\omega)(1+\cosh\omega)\Big) Q^{\frac{-3-d}{2}} K_{\frac{1-d}{2}}(Q) \Big\}
\end{aligned}
\tag{2.44}
$$

and:

$$
\begin{aligned}
T^c_{\perp\perp} &= 2^{-d-1}\,\pi^{\frac{-1-d}{2}}\left(\frac{\epsilon}{2m}\right)^{\frac{-1-d}{2}} K_{\frac{-1-d}{2}}(m\epsilon) \\
&\pm 2^{-d-2}\,\pi^{\frac{-1-d}{2}}\left(\frac{x}{m}\right)^{\frac{-1-d}{2}} \frac{4mx}{d}\, K_{\frac{1-d}{2}}(2mx) \qquad \begin{pmatrix} D \\ N \end{pmatrix} \\
&- 2^{\frac{-d-3}{2}}\,\pi^{\frac{-1-d}{2}} m^{1+d} \qquad (2.45) \\
\cdot \int_0^\infty \frac{d\omega}{(\pi^2+\omega^2)} &\Big\{\big(-d+1+\frac{2}{d}-(3-d-\frac{2}{d})\cosh\omega\big)\, Q^{\frac{-1-d}{2}} K_{\frac{-1-d}{2}}(Q) \\
&- \Big(\big(\frac{2+d}{d}+\frac{2-d}{d}\cosh\omega\big)Q^2 + 2\,P(\omega)(1+\cosh\omega)\Big)\, Q^{\frac{-3-d}{2}} K_{\frac{1-d}{2}}(Q)\Big\}
\end{aligned}
$$

and the alternate form:

$$
\left\langle T^c_{\mu\nu}\right\rangle = A^c\, g_{\mu\nu} + B^c\, \eta_\mu\eta_\nu + C^c\, \rho_\mu\rho_\nu \qquad (2.46)
$$

is given in Appendix B. We see that the singularity structure of the conformal stress tensor is identical to that of the canonical tensor reflecting asymptotic conformal invariance at short distance. We shall see subsequently that the conformal tensor is traceless modulo mass effects. None of these cases will contain trace anomalies.

III. Discussion of Results

A. Leading Structure of Stress Tensors

Presently we discuss the structure of these results and give a physical interpretation. As we've seen in eq.(2.29) the leading (high temperature or small x) behavior of $\langle\phi^2\rangle$ is given for $d=3$:

$$
\left\langle\phi^2(x)\right\rangle \to -\frac{T^2}{12} \qquad\qquad T = \frac{1}{2\pi x} \qquad (3.1)
$$

What about the analogous results for stress-tensors as obtained in the preceding section?

First we examine the leading behavior of $\langle T_{00}\rangle$, the conventional stress tensor. We drop the universal short distance contribution, corresponding to renormalizing

$\langle T_{\mu\nu}\rangle$ to be zero in flat coordinates (or zero in the limit of no acceleration). The Unruh expectation value gives:

$$\begin{aligned}\langle T_{00}\rangle &= -\frac{m^4}{4\pi^2 x^4}\int_0^\infty \frac{d\omega}{(\pi^2+\omega^2)}\left[Q^{-2}K_2(Q)(4+\cosh\omega)\right] \\ &\quad + Q^3 K_1(Q)\left[\frac{Q^2}{2}(3+\cosh\omega) - P(\omega)(1+\cosh\omega)\right] \qquad (3.2)\\ &\rightarrow -\frac{1}{8\pi^2 x^4}\int_0^\infty \frac{d\omega}{(\pi^2+\omega^2)(1+\cosh\omega)^2} \\ &\quad \cdot\left[4+\cosh\omega - \frac{2(3\omega^2-\pi^2)}{(\omega^2+\pi^2)^2}(1+\cosh\omega)\right] \qquad (3.3)\\ & \qquad (3.4)\end{aligned}$$

using the small argument limits, $K_1(Q) \rightarrow 1/Q$ and $K_2(Q) \rightarrow 2/Q^2$ for small Q (and we've already used $K_\nu = K_{-\nu}$). Thus, making use of the integrals tabulated in eq.(A.17 – A.19) we have:

$$\langle T_{00}\rangle \rightarrow \frac{-11}{480\pi^2 x^4} = -11aT^4 \qquad (3.5)$$

where the Stefan-Boltzmann constant $a = \frac{\pi^2}{30}$ is occurs.

The conventional stress tensor for a scalar does not yield the usual Stefan-Boltzmann constant in the Unruh vacuum for the conventional stress tensor. This is not too surprising since this constant is the result of a geometric integral which is rotationally invariant in the usual thermal ensemble, but which is not rotationally invariant in the present case, a point which has been emphasized previously in ref.(5). Furthermore, the conventional stress tensor is not formally traceless in the massless limit and does not closely resemble the case of radiation.

The conformal stress tensor can be evaluated similarly and yields a more pleasing result which we quote:

$$\langle T^c_{00}\rangle \rightarrow -\frac{1}{480\pi^2 x^4} = -aT^4 \qquad (3.6)$$

This is consistent with the calculation of ref.(8). Thus the Unruh vacuum produces a singular energy density on the horizon which has the structure of thermal corrections but with the opposite sign. Moreover, we see that the leading behavior of the conformal stress tensor is that of radiation, $T^c_{\mu\nu} \rightarrow -aT^4\ diag\ (1, -\frac{1}{3}, -\frac{1}{3}, -\frac{1}{3})$ in the sense of tracelessness.

B. Mass Corrections and Effective Potential

Our results are sufficiently general that they allow a discussion of the mass corrections to the energy density, and therefore, the effective potential. We give presently a very sketchy discussion; some of the ideas have been previously discussed in ref.(7).

The effective potential can be understood as a variational calculation in the Schroedinger picture. One constructs a gaussian wavefunctional centered about some "classical" field configuration, ϕ_c (which is considered to be O(1) in an expansion in powers of $\hbar$). The wavefunctional is given an arbitrary mass parameter, μ and one computes the expectation value of the Hamiltonian in this state with some regulator scheme. Then, this regularized expression is varied with respect to the parameter μ to obtain a "mass–gap" equation for μ. The solution to this equation may be substituted back into the regularized expression for the energy. Then the result is renormalized to obtain the effective potential to order $\hbar$. This information is implicit in the stress-tensor expectation values obtained above.

In thermal equilibrium we consider a state centered about the classical minimum of the potential, but described by a thermal density matrix. We can then extract the finite temperature contributions to the energy expectation value in a high temperature expansion. The analyses given by Weinberg, Kirzhnitz and Linde, and Dolan and Jackiw [10] contain essentially this idea, but the technical methods of evaluating effective potentials vary. We have encountered a sublety here however in that to recover the results of [10] we must assume that the mass appearing in the density matrix is a constant, independent of ϕ_c, rather than the solution to the mass gap equation. If we use the full solution to the mass gap equation the numerical coefficients change, but the physical conclusion of the section remains unaltered.

We may compare our calculations of the energy density in the Unruh vacuum to these finite temperature analyses. We consider presently a field theory with Hamiltonian density (T_{00}; we could also add corrections to this in the case of conformal coupling):

$$H = \frac{1}{2}\left\{\pi^2 + (\nabla\phi)^2 - m^2\phi^2 + \frac{\lambda}{12}\phi^4\right\} \tag{3.7}$$

Choosing to compute in a wavefunctional centered about ϕ_c is equivalent to shifting $\phi \to \phi + \phi_c$ in eq.(3.7). Furthermore, terms linear in ϕ will produce vanishing

contributions to the energy expectation value and may be dropped. The resulting quadratic Hamiltonian to order ϕ^2 in the quantum fluctuation after shifting becomes:

$$H = -\frac{m^2\phi_c^2}{2} + \frac{\lambda\phi_c^4}{24} + \frac{1}{2}\left\{\pi^2 + (\nabla\phi)^2 + (\mu^2)\phi^2\right\} \tag{3.8}$$

where $\mu^2 = -m^2 + \lambda\phi_c^2/2$ is the mass of the quantum field ϕ. At this point we can use the leading behavior of the stress tensor component, T_{00} as defined above to evaluate the Unruh expectation value of the kinetic terms, $\langle\pi^2 + (\nabla\phi)^2\rangle$ and the behavior of $\langle\phi^2\rangle \rightarrow \frac{-T^2}{12}$ to obtain the effective thermal potential, which is in agreement with the results of [10] for the coefficient of the $\lambda\phi_c^2T^2$ term, *but has opposite sign!*

Is this the correct procedure or should we consider a full expansion of the stress-tensor matrix elements obtained in Section II? In the Unruh vacuum the leading behavior of the expectation value of the energy density of eq.(3.8) follows from the leading plus next to leading terms in the expansion of the stress-tensor matrix elements:

$$\begin{aligned}\langle T_{00}^c\rangle &= -\frac{\mu^4}{4\pi^2x^4}\int_0^\infty \frac{d\omega}{(\pi^2+\omega^2)}\left[Q^{-2}K_2(Q)(2-\cosh\omega)\right] \\ &\quad + Q^3K_1(Q)\left[\frac{Q^2}{6}(5-\cosh\omega) - P(\omega)(1+\cosh\omega)\right] \qquad (3.9)\\ &\rightarrow (\textit{leading terms}) \\ &\quad -\frac{\mu^2}{48\pi^2x^2}\int_0^\infty \frac{d\omega}{(\pi^2+\omega^2)(1+\cosh\omega)} \\ &\quad \cdot\left[-1+2\cosh\omega - \frac{6(3\omega^2-\pi^2)}{(\omega^2+\pi^2)^2}(1+\cosh\omega)\ln(1+\cosh\omega)\right]\end{aligned} \tag{3.10}$$

We note that the last term would integrate to zero without the log factor (hence the μ^2T^2 factors in the argument of the log do not contribute; this latter integral is given in eq.(A.20)). These expressions involve the mass-gap, μ^2 and lead to a different result for the coefficient of the $\lambda\phi_c^2T^2$ term. This is not surprising because these terms include the mass insertion in the kinetic term loop, which is absent in our naive estimate above in which only the leading behavior of the kinetic terms is kept. These terms may be somehow neglected in the analyses of [10], but we feel

it merits a closer scrutiny of the Schroedinger picture description of the thermal effective potential to understand the correspondence with the standard treatments.

Thus we obtain for the effective potential to this order:

$$\langle H \rangle = -\frac{m^2\phi_c^2}{2} + \frac{\lambda\phi_c^4}{24} - AT^4 - B\lambda\phi_c^2 T^4 \tag{3.11}$$

where A is the Stefan-Boltzman constant in the case of the conformal tensor and we find from eq.(3.9), $B = \frac{79}{360}$ while the "naive" estimate gave $B = \frac{1}{24}$. Of course, these terms will vary with the definition of the Hamiltonian as does the Stefan-Boltzmann constant in going from the conventional to the conformal stress-tensor.

This latter result shows that *there is no critical Hawking temperature above which symmetry is restored in the Unruh vacuum.* This is the principal result of this section. As one increases T one simply drives the system deeper into a broken symmetry state. Moreover, since the Minkowski vacuum produces the usual $T = 0$ result for the effective potential, we see that it is more in the direction of increasing the symmetry, hence consistent with the interpretation that it is full of a thermal distribution of Rindler particles. Thus, we see that symmetries are not restored as seen by accelerating observers (a fundamental consequence of general covariance) and that this is consistent with the dynamics as interpreted by the accelerating observer.

C. Conclusions

We have given a complete discussion of the interesting local operator matrix elements in the Unruh vacuum and a short study of the effective potential and its correspondence with thermal results. We may amplify this latter discussion elsewhere.

We conclude by emphasizing that the Unruh vacuum is a fictitious object (emulating the Boulware vacuum in Schwarzschild geometry). Though matrix elements differ between the Minkowski vacuum and the Unruh vacuum, all physical measurements will produce the usual results given by the Minkowski vacuum suitably transformed to the observers local coordinate system. There is therefore no physical manifestation of the "thermal distribution" of Rindler particles seen by the

accelerated observer (e.g. no stress-energy, etc.). Nonetheless, it is striking that the difference in the matrix elements of the two vacua has the general structure of thermal behavior.

We remark that we are concerned about how these fictitious effects are in fact separated from the physical effects in black-hole evaporation. Unfortunately, an exact treatment of gravitational collapse is formidable. The usual quasi-intuitive discussions of Hawking radiation are not sensitive to these subtleties and potentially misleading.

Appendix A: Integrals

Presently we derive two results:

$$\int_0^\infty \cosh(\omega x) K_{ix}(u) K_{ix}(v) dx = \frac{\pi}{2} K_0(\sqrt{u^2 + v^2 + 2uv\cos\omega}) \tag{A.1}$$

and:

$$\begin{aligned}\int_0^\infty \sinh(\omega x) K_{ix}(u) K_{ix}(v) dx &= \frac{\pi}{2} K_0(\sqrt{u^2 + v^2 + 2uv\cos\omega}) \\ &\quad - 2\omega \int_0^\infty \frac{dz}{\omega^2 + z^2} K_0(\sqrt{u^2 + v^2 + 2uv\cosh z})\end{aligned} \tag{A.2}$$

Eq.(A.1) is standard (see ref.(9)) while we have not previously encountered the representation of eq.(A.2).

Consider first the integral,

$$I_0 = \int_0^\infty dx\, e^{-\omega x} K_{ix}(u) K_{ix}(v), \tag{A.3}$$

where u, v, ω are real positive variables. We may use MacDonald's representation:

$$K_\mu(u) K_\nu(v) = \frac{1}{2} \int_0^\infty \exp\left(-\frac{t}{2} - \frac{u^2 + v^2}{2t}\right) K_\mu\left(\frac{uv}{t}\right) t^{-1} dt \tag{A.4}$$

and the standard integral representation:

$$K_\mu(x) = \frac{1}{2} \int_0^\infty \exp\left(-\frac{x}{2}(l + l^{-1})\right) l^{-\mu-1} dl \qquad Re(x) > 0. \tag{A.5}$$

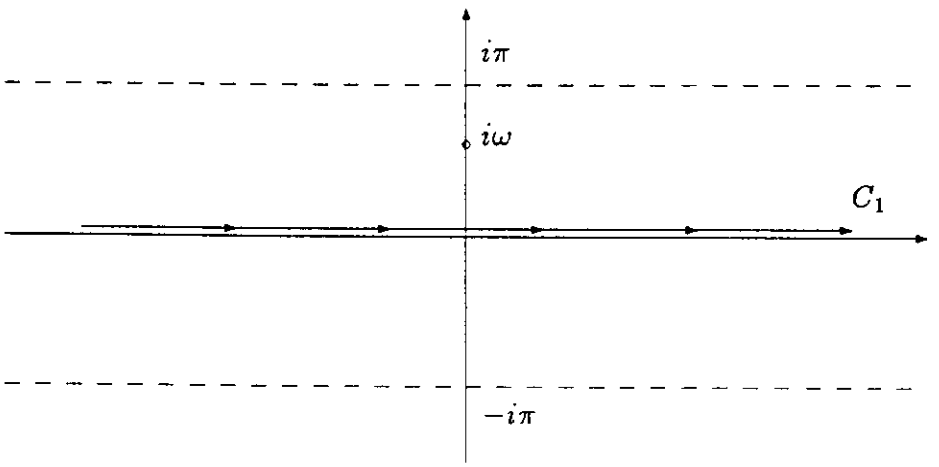

Figure 1: Complex z–plane and C_1 contribution.

So we have:

$$I_0 = \frac{1}{4}\int_0^\infty \exp\left(-\omega x - \frac{t}{2} - \frac{u^2+v^2}{2t} - \frac{uv}{2t}(l+l^{-1})\right) l^{-ix-1}\, t^{-1} dl\, dt\, dx \qquad \text{(A.6)}$$

Consider the x–subintegral:

$$\int_0^\infty dx\, l^{-ix} e^{-\omega x} = \int_0^\infty dx\, e^{-(\omega + i\ln l)x} = \frac{1}{\omega + i\ln l} \qquad \text{(A.7)}$$

which is valid for real positive ω, l. However, by analytic continuation we may use this as a definition for negative omega, provided we are careful to account for a pole which crosses the real-l axis. If the l–plane cut is chosen to lie on the negative real axis, we may convert to the variable $x = \ln l$ and we are led to the integrals:

$$\begin{aligned} J_\pm &= \int_0^\infty \frac{dl}{l}\, dx\, l^{-ix} \begin{pmatrix} \cosh \omega x \\ \sinh \omega x \end{pmatrix} e^{-\alpha(l+l^{-1})} \\ &= \frac{1}{2}\int_{C_2} \frac{dz}{-\omega + iz} e^{-2\alpha\cosh z} \pm \frac{1}{2}\int_{C_1} \frac{dz}{\omega + iz} e^{-2\alpha\cosh z} \end{aligned} \qquad \text{(A.8)}$$

where the contours and cut structure are displayed in the complex z–plane in figures (1) and (2).

We write the first term above in terms of an integral along C_1 and a pole contribution:

$$J_\pm = \pi e^{-2\alpha\cos\omega} + \frac{1}{2}\int_{C_1} dz\, e^{-2\alpha\cosh z}\left\{\frac{1}{-\omega + iz} \pm \frac{1}{\omega + iz}\right\} \qquad \text{(A.9)}$$

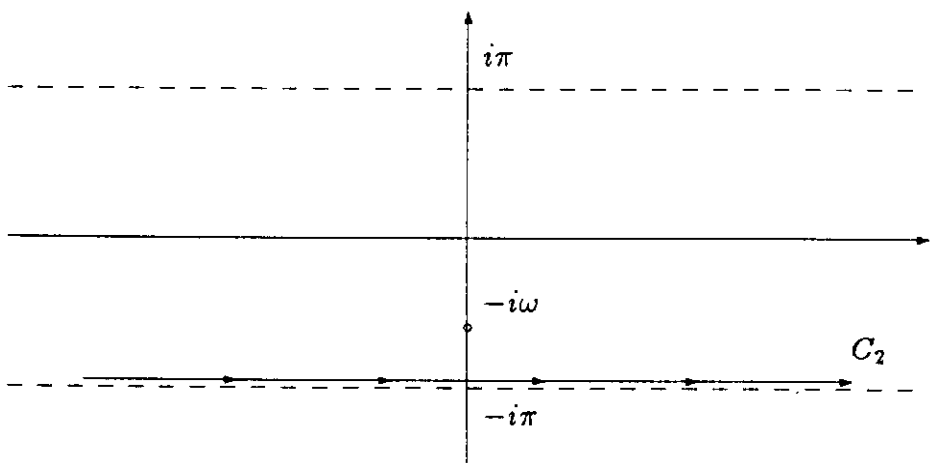

Figure 2: Contour C_2 contribution lies below pole when eq.(A.7) is analytically continued.

Thus, with a change of variable, $z' = -z$ we obtain:

$$J_+ = \pi e^{-2\alpha\cos\omega} \tag{A.10}$$

while for J_- we simply are left with the uncancelled C_1 contribution:

$$J_- = \pi e^{-2\alpha\cos\omega} - \int_0^\infty \frac{2\omega\ dz}{\omega^2 + z^2} e^{-2\alpha\cosh z} \tag{A.11}$$

Substituting these results for the relevant subintegrals in eq.(A.6) and making use of the standard integral representation of eq.(A.5) yields the results of eq.(A.1) and eq.(A.2).

These results lead to the following corollary results which are used in the calculations of this paper:

$$\int_0^\infty \cosh\pi x\ K_{ix}(u)\ K_{ix}(v)\ dx = \frac{\pi}{2}\ K_0(|\ u - v\ |) \tag{A.12}$$

$$\begin{aligned}\int_0^\infty \sinh\pi x\ K_{ix}(u)\ K_{ix}(v)\ dx &= \frac{\pi}{2}\ K_0(|\ u - v\ |) \\ &- \int_0^\infty \frac{\pi\ dz}{z^2 + \pi^2} K_0\left(\sqrt{u^2 + v^2 + 2uv\cosh z}\right)\end{aligned} \tag{A.13}$$

$$\int_0^\infty x^2 \cosh\pi x\ K_{ix}(u)\ K_{ix}(v)\ dx = -\frac{\pi}{2}\ \frac{uv}{|\ u - v\ |} K_1(|\ u - v\ |) \tag{A.14}$$

$$\int_0^\infty x^2\, K_{ix}(u)\, K_{ix}(v)\, dx = \frac{\pi}{2}\, \frac{uv}{|\, u+v\,|} K_1(|\, u+v\,|) \tag{A.15}$$

$$\begin{aligned}\int_0^\infty x^2\, \sinh \pi x\, K_{ix}(u)\, K_{ix}(v)\, dx &= -\frac{\pi}{2}\, \frac{uv}{|\, u-v\,|} K_1(|\, u-v\,|) \\ &+ \int_0^\infty \frac{2\pi(3z^2-\pi^2)\, dz}{(z^2+\pi^2)^3} K_0\left(\sqrt{u^2+v^2+2uv\cosh z}\right)\end{aligned} \tag{A.16}$$

In evaluating the leading behaviors in d=3 we have required the following integrals which follow by consideration of the appropriate contour integration:

$$\int_0^\infty \frac{dx}{(1+x^2)(1+\cosh \pi x)} = \frac{\pi}{12} \tag{A.17}$$

$$\int_0^\infty \frac{dx}{(1+x^2)(1+\cosh \pi x)^2} = \frac{11\pi}{360} \tag{A.18}$$

$$\int_0^\infty \frac{(3x^2-1)\, dx}{(1+x^2)^3(1+\cosh \pi x)} = -\frac{\pi^3}{240} \tag{A.19}$$

$$\int_0^\infty \frac{(3x^2-1)\, dx}{(1+x^2)^3(1+\cosh \pi x)}\, \ln(1+\cosh \pi x) = -\frac{11\pi^3}{720} \tag{A.20}$$

where eq.(A.19) can be obtained in terms of eq.(A.18,A.17) by a trick and eq.(A.20) follows from eq.(A.18) upon a double integration by parts.

Appendix B: Stress-Tensor Matrix Elements

Here we quote the results for matrix elements involved in the evaluation of the stress tensor.

We note that $\langle \nabla_x \phi(x_1) \nabla_x \phi(x_2) \rangle$ is most conveniently obtained by differentiation of the previous expression for $\langle \phi(x_1)\phi(x_2) \rangle$ while $\left\langle \left(\vec{\nabla}_\perp \phi(x_1) \cdot \vec{\nabla}_\perp \phi(x_2) + m^2 \phi(x_1)\phi(x_2) \right) \right\rangle$ requires directly evaluating:

$$\begin{aligned}&\frac{1}{2}\left\langle \left(\vec{\nabla}_\perp \phi(x_1) \cdot \vec{\nabla}_\perp \phi(x_2) + m^2 \phi(x_1)\phi(x_2) \right) \right\rangle = \\ &\qquad \frac{1}{2a\pi^2} \int dp \frac{d^{d-1}k_\perp}{(2\pi)^{d-1}} \sinh\left(\frac{\pi p}{a}\right) \sqrt{(k_\perp^2+\mu^2)}\, K_{\frac{ip}{a}}(x_1) K_{\frac{ip}{a}}(x_2)\end{aligned} \tag{B.1}$$

in the Unruh case and with the appropriate replacement of $\sinh(\frac{\pi p}{a})$ by $\coth(\frac{\pi p}{a})$ or $\tanh(\frac{\pi p}{a})$ in the D or N cases.

We obtain the results for the basic operators:

$$
\begin{aligned}
-\frac{1}{2}\left\langle \frac{\delta^2}{\delta\phi(x_1)\delta\phi(x_2)} \right\rangle = -2^{-d-2}\pi^{\frac{-1-d}{2}}. \\
\left\{ \left(\frac{\epsilon}{2m}\right)^{\frac{-1-d}{2}} K_{\frac{-1-d}{2}}(m\epsilon) \right. \\
\mp \left(\frac{x}{m}\right)^{\frac{-1-d}{2}} \left(K_{\frac{-1-d}{2}}(2xm)\right) \quad \begin{pmatrix} D \\ N \end{pmatrix} \\
\left. -2^{\frac{d+3}{2}} m^{d+1} \int_0^\infty \frac{d\omega}{\pi^2+\omega^2} P(\omega)(1+\cosh\omega) Q^{\frac{-3-d}{2}} K_{\frac{-1-d}{2}}(Q) \right\}
\end{aligned}
\tag{B.2}
$$

where:

$$
P(\omega) = \frac{4(3\omega^2-\pi^2)}{(\pi^2+\omega^2)^2}; \qquad Q = \sqrt{2}\, mx \sqrt{(1+\cosh\omega)} \tag{B.3}
$$

and:

$$
\begin{aligned}
\frac{1}{2}\langle \nabla_x\phi(x_1)\nabla_x\phi(x_2)\rangle = -2^{-d-2}\pi^{\frac{-1-d}{2}}. \\
\left\{ \left(\frac{\epsilon}{2m}\right)^{\frac{-1-d}{2}} \left(d\, K_{\frac{-1-d}{2}}(m\epsilon) + m\epsilon\, K_{\frac{1-d}{2}}(m\epsilon)\right) \right. \\
\pm \left(\frac{x}{m}\right)^{\frac{-1-d}{2}} \left(d\, K_{\frac{-1-d}{2}}(2xm) + 2mx\, K_{\frac{1-d}{2}}(2mx)\right) \quad \begin{pmatrix} D \\ N \end{pmatrix} \\
- 2^{\frac{d+1}{2}} m^{d+1} \int_0^\infty \frac{d\omega}{\pi^2+\omega^2} \left(\left[(1-d)\cosh\omega - (1+d)\right] Q^{\frac{-1-d}{2}} K_{\frac{-1-d}{2}}(Q) \right. \\
\left. \left. -(1+\cosh\omega) Q^{\frac{1-d}{2}} K_{\frac{1-d}{2}}(Q) \right) \right\}
\end{aligned}
\tag{B.4}
$$

and:

$$\frac{1}{2}\left\langle\left(\vec{\nabla}_\perp\phi(x_1)\cdot\vec{\nabla}_\perp\phi(x_2)+m^2\phi(x_1)\phi(x_2)\right)\right\rangle = -2^{-d-2}\pi^{\frac{-1-d}{2}}\cdot$$
$$\left\{\left(\frac{\epsilon}{2m}\right)^{\frac{-1-d}{2}}\left((1-d)\,K_{\frac{-1-d}{2}}(m\epsilon)-m\epsilon\,K_{\frac{1-d}{2}}(m\epsilon)\right)\right.$$
$$\mp\left(\frac{x}{m}\right)^{\frac{-1-d}{2}}\left((1-d)\,K_{\frac{-1-d}{2}}(2xm)-2mx\,K_{\frac{1-d}{2}}(2mx)\right)\begin{pmatrix}D\\N\end{pmatrix} \tag{B.5}$$
$$+2^{\frac{d+3}{2}}m^{d+1}\int_0^\infty\frac{d\omega}{\pi^2+\omega^2}\left((d-1)Q^{\frac{-1-d}{2}}K_{\frac{-1-d}{2}}(Q)\right.$$
$$\left.\left.+Q^{\frac{1-d}{2}}K_{\frac{1-d}{2}}(Q)\right)\right\}$$

Here the lines containing the $\begin{pmatrix}D\\N\end{pmatrix}$ symbols apply only to the case of Dirichlet and Neumann boundary conditions for the unaccelerated hamiltonian while the last line on the rhs of each equation applies only to the Unruh case. This allows us to write for the renormalized canonical stress tensor the result:

$$\langle T_{\mu\nu}\rangle_U = A\,g_{\mu\nu}+B\,\eta_\mu\eta_\nu+C\,\rho_\mu\rho_\nu \tag{B.6}$$

where we obtain (upon throwing away the singular terms in the Unruh case):

$$A = -\,2^{\frac{-d-3}{2}}\pi^{\frac{-1-d}{2}}m^{1+d}\int_0^\infty\frac{d\omega}{\pi^2+\omega^2}$$
$$\left\{\left[(3+\cosh\omega)Q^2+2P(\omega)(1+\cosh\omega)\right]\,Q^{\frac{-3-d}{2}}K_{\frac{1-d}{2}}(Q)\right. \tag{B.7}$$
$$\left.-\,[3d+5+(1-d)\cosh\omega]\,Q^{\frac{-1-d}{2}}K_{\frac{-1-d}{2}}(Q)\right\}$$

$$B = -\,2^{\frac{-d-1}{2}}\pi^{\frac{-1-d}{2}}m^{1+d}\int_0^\infty\frac{d\omega}{\pi^2+\omega^2}$$
$$\left\{[1+\cosh\omega]\,Q^{\frac{1-d}{2}}K_{\frac{1-d}{2}}(Q)-[(1-d)(1+\cosh\omega]\,Q^{\frac{-1-d}{2}}K_{\frac{-1-d}{2}}(Q)\right\} \tag{B.8}$$

$$C = -\,2^{\frac{-d-1}{2}}\pi^{\frac{-1-d}{2}}m^{1+d}\int_0^\infty\frac{d\omega}{\pi^2+\omega^2}$$
$$\left\{[-2\,P(\omega)(1+\cosh\omega)]\,Q^{\frac{-3-d}{2}}K_{\frac{1-d}{2}}(Q)+2\,Q^{\frac{-1-d}{2}}K_{\frac{-1-d}{2}}(Q)\right\} \tag{B.9}$$

We see that the Unruh vacuum produces a stress tensor matrix element which depends upon the usual metric, the instantaneous surface normal vector, η_μ and

the proper acceleration vector, ρ_μ:

$$\begin{aligned} g_{\mu\nu} &= diag\ [1,\ -1,\ \ldots,-1] \\ \eta_\mu\eta_\nu &= diag\ [0,\ 1,\ 0,\ \ldots,\ 0] \\ \rho_\mu\rho_\nu &= diag\ [1,\ 0,\ \ldots,\ 0] \end{aligned} \tag{B.10}$$

This is in contrast to the case of the plane conducting wall which yields:

$$\begin{aligned} \langle T_{\mu\nu}\rangle = \mp 2^{-d-2}\pi^{\frac{-1-d}{2}} \left(\frac{x}{m}\right)^{\frac{-1-d}{2}} \cdot \\ \left\{2(1-d)\ K_{\frac{-1-d}{2}}(2xm) - 4mx\ K_{\frac{1-d}{2}}(2xm)\right\} \\ \cdot\ diag\ (1,0,-1,...,-1) \qquad \begin{pmatrix} D \\ N \end{pmatrix} \end{aligned} \tag{B.11}$$

with no dependence upon the timelike vector ρ_μ. We mention in passing that there are artifacts of the point–split regularization method. Since we have computed in an arbitrary space–time dimensionality, $d+1$, we can take the $\epsilon \to 0$ limit in fractional dimension d and attempt to recover the dimensionally regularized results for, e.g. the vacuum energy density, T_{00}. In fact, the vacuum energy is just the sum over zero point energies of all momentum mode oscillators:

$$T_{00} = \frac{1}{2}\int \frac{d^dk}{(2\pi)^d}\sqrt{k^2+m^2} = -2^{-d-2}\pi^{\frac{-1-d}{2}}\ m^{1+d}\ \Gamma\left(\frac{-1-d}{2}\right) \tag{B.12}$$

while the point–split result obtained above is:

$$T_{00} = -2^{-d-2}\pi^{\frac{-1-d}{2}}\left(\frac{\epsilon}{2m}\right)^{\frac{-1-d}{2}} K_{\frac{-1-d}{2}}(m\epsilon) \tag{B.13}$$

If we consider the $\epsilon \to 0$ limit of eq.(B.13) by standard Bessel function small argument limits we find that eq.(B.13) goes over to the result of eq.(B.12). In the point–split case the singular terms of the stress–tensor are not proportional to the metric, but in the above limit we find that the dimensionally regularized expression is proportional to the metric.

The computation of the conformal stress tensor (here we mean that which occurs when the scalar is conformally coupled to curvature, but we generally include a

mass term as well; the true tree approximation conformally invariant case occurs when the mass is taken to zero) involves additional operator expectation values as seen in eq.(2.31). This may be evaluated directly in the Rindler coordinate system and involves terms with the Christoffel connection symbols. Alternatively, we may evaluate in Minkowski space but transform to the Rindler operators (the canonical momentum) to evaluate the matrix element in the Unruh vacuum. We adopt the latter approach here.

We require the quantity $\langle(\phi^2)_{00}\rangle$ where the time derivatives refer to Minkowski space. This must be transformed to Rindler coordinates of eq.(1.3). We note that:

$$\left\langle(\phi^2)_{00}\right\rangle \neq \left(\left\langle\phi^2\right\rangle\right)_{00} \tag{B.14}$$

and on the time slice $t = \tau = 0$ we obtain:

$$\left\langle(\phi^2)_{00}\right\rangle = -e^{-2\xi}\left\langle\frac{\partial}{\partial\xi}(\phi^2)\right\rangle = -\frac{1}{x}\frac{d}{dx}\left\langle\phi^2\right\rangle \tag{B.15}$$

where we find:

$$\begin{aligned}\left\langle\frac{1}{x}\nabla_x\phi^2\right\rangle = 2^{-d+1}\pi^{\frac{-1-d}{2}}.&\\ \left\{\pm\left(\frac{x}{m}\right)^{\frac{-1-d}{2}} K_{\frac{-1-d}{2}}(2mx)\right.&\left(\begin{array}{c}D\\N\end{array}\right)\\ \left.+2^{\frac{d+1}{2}}m^{d+1}\int_0^\infty\frac{d\omega}{\pi^2+\omega^2}(1+\cosh\omega)Q^{\frac{-1-d}{2}}K_{\frac{-1-d}{2}}(Q)\right\}&\end{aligned} \tag{B.16}$$

and:

$$\begin{aligned}\left\langle\nabla_x^2\phi^2\right\rangle = -2^{-d+1}\pi^{\frac{-1-d}{2}}.&\\ \left\{\pm\left(\frac{x}{m}\right)^{\frac{-1-d}{2}}\left(d\,K_{\frac{-1-d}{2}}(2mx)+2mx\,K_{\frac{1-d}{2}}(2mx)\right)\right.&\left(\begin{array}{c}D\\N\end{array}\right)\\ +2^{\frac{d+1}{2}}m^{d+1}\int_0^\infty\frac{(1+\cosh\omega)d\omega}{\pi^2+\omega^2}&\\ \left.\left(dQ^{\frac{-1-d}{2}}K_{\frac{-1-d}{2}}(Q)+Q^{\frac{1-d}{2}}K_{\frac{1-d}{2}}(Q)\right)\right\}&\end{aligned} \tag{B.17}$$

This may be assembled into a final expression for the conformal stress tensor given by:

$$\left\langle T^c_{\mu\nu} \right\rangle = A^c \, g_{\mu\nu} + B^c \, \eta_\mu \eta_\nu + C^c \, \rho_\mu \rho_\nu \tag{B.18}$$

where in the Unruh case we have:

$$\begin{aligned} A^c = & -2^{\frac{-d-3}{2}} \pi^{\frac{-1-d}{2}} m^{1+d} \int_0^\infty \frac{d\omega}{\pi^2+\omega^2} \\ & \left\{ \left[\left(\frac{2+d}{d} + \frac{2-d}{d} \cosh\omega \right) Q^2 + 2P(\omega)(1+\cosh\omega) \right] Q^{\frac{-3-d}{2}} K_{\frac{1-d}{2}}(Q) \right. \\ & \left. - \left[\left(\frac{d-d^2+2}{d} \right) + \left(\frac{d^2-3d+2}{d} \right) \cosh\omega \right] Q^{\frac{-1-d}{2}} K_{\frac{-1-d}{2}}(Q) \right\} \end{aligned} \tag{B.19}$$

$$\begin{aligned} B^c = & -2^{\frac{-d-1}{2}} \pi^{\frac{-1-d}{2}} m^{1+d} \int_0^\infty \frac{d\omega}{\pi^2+\omega^2} \\ & \left\{ \frac{1}{d} \left[1+\cosh\omega \right] Q^{\frac{1-d}{2}} K_{\frac{1-d}{2}}(Q) \right\} \end{aligned} \tag{B.20}$$

and:

$$\begin{aligned} C^c = & -2^{\frac{-d-1}{2}} \pi^{\frac{-1-d}{2}} m^{1+d} \int_0^\infty \frac{d\omega}{\pi^2+\omega^2} \\ & \left\{ \left[-2\, P(\omega)(1+\cosh\omega) \right] Q^{\frac{-3-d}{2}} K_{\frac{1-d}{2}}(Q) \right. \\ & \left. + \left[1 - \cosh\omega + \frac{1+\cosh\omega}{d} \right] Q^{\frac{-1-d}{2}} K_{\frac{-1-d}{2}}(Q) \right\} \end{aligned} \tag{B.21}$$

For comparison we conclude with the conformal stress-tensor with the conducting boundary conditions:

$$\begin{aligned} \langle T_{\mu\nu} \rangle = & \mp 2^{-d} \pi^{\frac{-1-d}{2}} \left(\frac{x}{m} \right)^{\frac{-1-d}{2}} \left(\frac{mx}{d} \right) K_{\frac{1-d}{2}}(2xm) \\ & \cdot diag\ (1, 0, -1, ..., -1) \qquad \begin{pmatrix} D \\ N \end{pmatrix} \end{aligned} \tag{B.22}$$

It is readily verified that the trace of the preceding expression vanishes in the $m \to 0$ limit.

Acknowledgments

I wish to thank J. Traschen for useful discussions.

References

1. S. Hawking, *Commun. Math. Phys.* **43** (1975) 199
2. W. Unruh, *Phys. Rev.* **D14** (1976) 870
3. W. Rindler, *Am. J. Phys.* **34** (1966) 1174
4. N. Birrell and P. Davies, *(Cambridge University Press, 1982)*
5. K. Freese, C.T. Hill and M. Mueller, *Nucl. Phys.* **B255** (1985) 693
6. W. Unruh, N. Weiss *Phys. Rev.* **D29** (1984) 1656
7. C. T. Hill, *Phys. Letters* **155B** (1985) 343
8. P. Candelas, D. Deutsch, *Proc. Roy. Soc.* **A354** (1977) 79
9. A. Erdelyi, ed., *Bateman Manuscript Project* **Vol. 2** (1953) 5
10. S. Weinberg, *Phys. Rev.* **D9** (1974) 3357; D. Kirzhnitz, A. Linde, *Phys. Lett.* **42B** (1972) 471; L. Dolan, R. Jackiw, *Phys. Rev.* **D9** (1974) 3320