UPDATE ON THE DØ EXPERIMENT

Peter F. M. Koehler

Introduction

The DØ Detector represents the second large facility which is being built to study $\bar{p}p$ collisions in the new energy region opened up by the Fermilab Tevatron Collider. It is the first of the second-generation detectors, having been designed on the basis of the results from the $S\bar{p}pS$ collider at CERN.

The DØ Detector will complement the Collider Detector at Fermilab (CDF) in a number of important ways. The DØ experiment will stress the measurement of the primary entities emerging from short-distance hadron collisions: leptons (both muons and electrons), parton jets, and missing transverse energy (E_t) which signals the production of non-interacting particles. The choice to do without a central magnetic field has rendered the detector design compact and free from gaps in the calorimeter coverage, with room to accommodate a muon detection system over the full solid angle. The ability to place the calorimeters relatively close to the beams has made it possible to choose the uranium-liquid argon technique with its superior energy resolution, segmentation, ease of calibration, and resistance to radiation damage.

The primary physics goals of the DØ experiment include precision studies of the W and Z bosons, where it should be possible to detect departures from the standard model predictions at the level of higher order corrections, and the search for new states or phenomena in the mass region above the W and Z. These searches should be aided by the DØ Detector's superior capability to detect leptons, jets, and missing E_t, because the cleanest signatures of most postulated heavy objects (new quarks, bosons, leptons, or supersymmetric particles) incorporate these objects. The evanescent hints in the CERN $S\bar{p}pS$ experiments over the past year (monojets, top quarks, dimuon signals, high p_t W anomalies) have clearly demonstrated the utility of these capabilities. The CERN program has also shown once again the necessity of pursuing studies in new kinematic regimes with two independent experiments which compete with, confirm, and lead one another to an understanding of qualitatively new phenomena.

When Paul Grannis, the scientific spokesman for the DØ experiment, last reported in this publication (**fermilab report**; January 1, 1984), the design of the detector was just beginning to come together. The project has progressed substantially during the past 22 months in terms of the technical design, the R&D on particular detector components, the size of the collaboration committed to carry out this experiment, and the estimates of the resources and time required to implement the detector. Furthermore, the construction of the DØ Experimental Area is now

well under way and has just entered its critical phase with the demolition of the accelerator tunnel at long straight section DØ. Thus, this is a good time to provide a comprehensive update on the DØ experiment.

Overview of the DØ Detector

A cut-away view of the detector is shown below. Its three major detector systems are: the central detectors, the calorimeters, and the muon system.

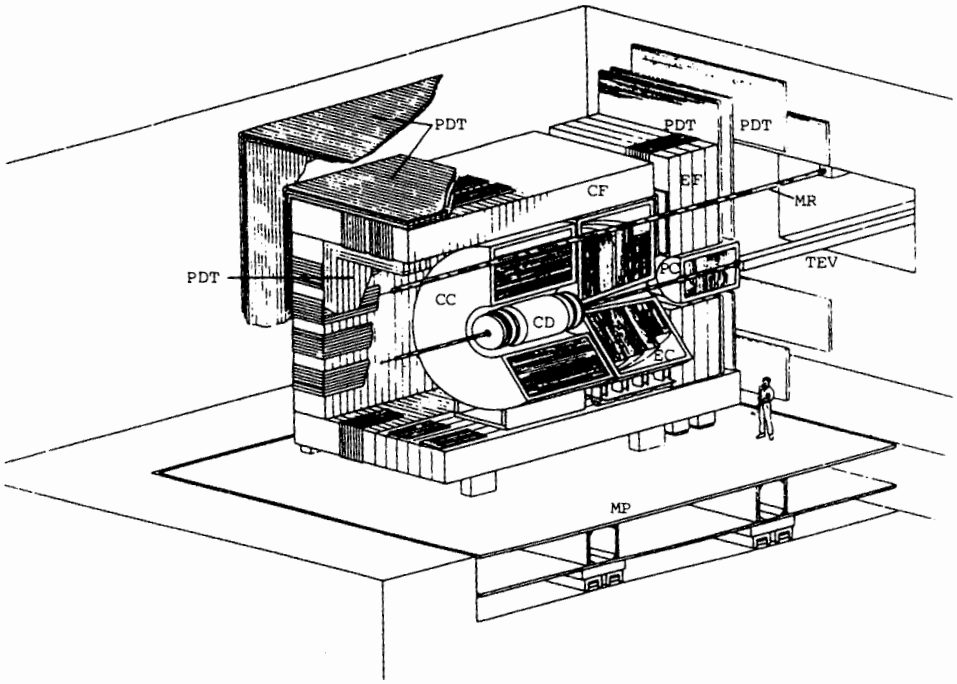

CD	Central Detectors	EF	End Toroid
CC	Central Calorimeter	PDT	Proportional Drift Tubes
EC	Endcap Calorimeter	MP	Moving Platform
PC	Plug Calorimeter	MR	Main Ring Beamline
CF	Central Toroid	TEV	Tevatron Beamline

The central detectors consist of three sets of drift chambers (Inner Vertex, Central, and Forward) to provide space-point coordinates and dE/dx information, and a set of transition radiation detectors for distinguishing electrons from hadrons in the central angular region. The Inner Vertex Chamber is a high-resolution drift chamber capable of resolving tracks and determining decay vertices in the high-flux environment just outside the beam pipe.

The calorimeters are separated into three angular regions (Central, Endcaps, and Plugs). They employ depleted uranium as the absorber medium for its high density and its ability to equalize the response to electrons and hadrons ("compensation"). In the case of the Central and Endcap Calorimeters, the gaps between the absorber plates are filled with liquid argon as the ionization medium for its ease of calibration, stability, and radiation hardness; this choice also makes it possible to incorporate fine segmentation readout in all three coordinates. Gas chamber sampling is employed in the Plug Calorimeters. The choice of materials for the calorimeters makes it possible to achieve a total absorption thickness large enough to contain high-energy showers within a compact volume.

The calorimeters are enclosed by the muon system, which consists of three magnetized iron toroids which bend the muons, thus enabling their polarity and momentum to be determined, and which serve as additional absorber for the remnants of the hadron debris emerging from the calorimeters. The full thickness of the detector varies from 13 to 18 absorption lengths over its solid angle. The muon trajectories before and after the toroids are determined with planes of proportional drift tubes which give space-point coordinates at ten locations along a muon track.

The entire detector, which will weigh approximately 5500 tons, will be mounted on a support platform so that it can be moved expeditiously between the Assembly Hall portion of the DØ Experimental Area and the Collision Hall.

Sophisticated electronics systems are required for the DØ Detector to acquire and process the information derived from the 5400 channels of drift chamber sense wires and delay lines, 1500 transition radiation detector wires, 46,000 calorimeter channels, and 12,000 muon proportional drift tubes. Each signal must be amplified and shaped, with special attention paid to noise levels and timing; transmitted to digitizing electronics for time and amplitude measurements; examined by fast trigger systems to select interesting candidates; transferred to a microprocessor-based higher-level filtering system; and logged by a host computer to permanent data storage. In order to reduce the problem of large bundles of cables trailing behind the moving detector, the electronics will be located as close to the detector as possible, some inside the moving support platform and some in a 3-level counting house which will move with the detector.

Only the higher-level filtering and data logging systems will be located in the fixed counting areas of the DØ Experimental Area.

Details of the DØ Detector can be found in the "Design Report for the DØ Experiment at the Fermilab Antiproton-Proton Collider", which was last issued in October, 1984, and in the many DØ Notes written by members of the collaboration.

The DØ Collaboration

The DØ Detector is being designed and built by a collaboration which by now includes more than 110 physicists, plus technical support personnel and graduate students, from the following 17 institutions:

Brookhaven National Laboratory
Brown University
Columbia University
Fermilab
Florida State University
Indiana University
Lawrence Berkeley Laboratory
University of Maryland
Michigan State University
New York University
Northwestern University
University of Pennsylvania
University of Rochester
CEN/Saclay
State University of New York/Stony Brook
Virginia Polytechnic Institute and State University
Yale University

It is likely that the collaboration will grow by the addition of a few more groups. Discussions are under way to delineate the specific responsibilities which the participants from the collaborating institutions will undertake towards the implementation of the DØ Detector.

Frequent meetings are an essential feature of having so many groups working together coherently. While the collaboration meets as a group only once a month, subgroups working on software and on subsystems of the detector get together more frequently. Furthermore, each of the last two summers the collaboration has held a weeklong workshop which has been very useful for working out design parameters and defining boundaries. In addition, the workshops gave all the members of this large and diverse collaboration a better sense of the detector as a whole and of its physics objectives.

Since Fermilab has the overall responsibility to the Department of Energy (DOE) for the DØ Detector project, the Experiments Support Department was established in the Accelerator Division on October 1, 1984, for the primary purpose of assisting the DØ

collaboration with the implementation of this detector, both technically and administratively. The Experiments Support Department presently numbers 24 members and, in addition, draws heavily on assistance from several other departments in the Accelerator Division and from the Physics Department, the Research Division, and the Technical Support Section. The total Fermilab manpower effort in support of the DØ Project is presently at the level of 40 full-time-equivalent persons and is projected to more than double over the next two years.

Activity Highlights

During the past two years the DØ collaboration has concentrated on carrying out a program of R&D work on many aspects of the detector, firming up component designs, and preparing detailed cost estimates of the entire detector for review by DOE.

Particularly noteworthy among the R&D efforts are studies of detector prototypes in test beams at Brookhaven (BNL), CERN, and Fermilab. In addition, the major activities included cosmic ray tests of the muon proportional drift tube prototypes, development of a data filtering system based on parallel microprocessors, and the development of Monte Carlo programs required to simulate events in the DØ Detector.

At BNL, a beam of pions and protons was used to test five prototype drift chamber cells in order to measure the dependence of the important performance parameters such as position resolution, two-track separation, and dE/dx discrimination on various design choices for the Central and Forward Drift Chambers and the associated electronics.

Prototypes of the Transition Radiation Detectors have been tested in a beam of pions and electrons at CERN in order to determine how the pion rejection efficiency depends on the choice of radiators (polypropylene foils, Li foils, or CH_2 fibers), X-ray detector gas (Xe-isobutane or Xe-CO_2), and signal counting method (total charge or cluster). It was found that the DØ design goal for pion rejection (30:1) can be obtained with multiple stacks of polypropylene foils and the use of cluster counting.

Extensive beam tests of a prototype uranium-liquid argon calorimeter were carried out at Fermilab. The primary aims were the measurement of the energy resolutions for electrons and pions between 10 and 150 GeV, a comparison of the calorimeter's response to electromagnetic and hadronic showers, determination of the position resolution, and studies of the total depth needed for adequate containment of hadronic showers. Two different arrangements of the calorimeter stack were tested in order to determine the dependence of the achievable resolutions on plate thickness. The results indicate that the ratio of the calorimeter's response to electromagnetic and hadronic showers of a

given energy is approximately 1.1 over the full range of energies tested and that the resolutions are in agreement with the design goals for the DØ Detector. These tests have also provided us with a wealth of useful information on assembly techniques for uranium-liquid argon calorimeters and on the performance of the electronics employed to extract the low-level calorimeter signals.

The results from this R&D program, which needs to be pursued vigorously throughout FY 86 and beyond, are being used to make and refine design choices for the DØ Detector. They are also reflected in the most recent "bottoms-up" cost estimate which was prepared earlier this month and presented to a DOE Review Committee. In terms of FY 86 dollars, the base cost of the DØ Detector is estimated to be $36.1M; the addition of a 32% contingency brings the total estimated cost of the project to $47.8M. Thus the total estimated cost for the detector has not changed since the first detailed estimate was compiled a year ago.

Schedule and Milestones

The DØ collaboration is committed to the task of achieving a detector capable of its full physics potential as early as possible. Given our assessment of the scope of work ahead, and the technical resources available to us, we have developed a detailed implementation plan which aims to achieve hermetic coverage in all three detector systems (tracking, calorimetry, and muon detection) by late 1989 and complete the detector in 1990. The major milestones along the way are the following:

September 1986	Begin assembly of the support platform in the Assembly Hall portion of the DØ Experimental Area.
March 1987	Complete assembly of the support platform; begin assembly of muon toroid magnets.
November 1987	Complete toroids; Vertex Chamber, Central Transition Radiation Detectors, Central Drift Chambers, and first portion of muon Proportional Drift Tubes ready; begin installation of cables, electronics, and computers.
July 1988	Tracking and muon detection systems installed; Central and Plug Calorimeters complete, along with cryogenic support services. Ready for beam test of partial detector.

April 1989	Complete Endcap Calorimeters, fast trigger electronics. Continue installation of electronics, data acquisition system, computers.
October 1989	Detector ready for first data run with hermetic coverage in tracking, calorimetry, and muon detection.
July 1990	Fully instrumented detector complete.

This plan has received support from Fermilab and from DOE after review of the DØ Detector in May and November, 1985. Their combined efforts have been successful in achieving a significant improvement in the equipment allocation to this project during FY 86, which is the crucial year when the transition from design to fabrication must take place for all of the major systems. The collaboration now has its collective hands full to respond to this challenge. The recent successful test of the Antiproton Source, the acceleration and storage of protons and antiprotons in the Accelerator, and CDF's observation of the first $\bar{p}p$ collisions at 1.6 TeV has provided additional incentive and urgency to the work of the DØ collaboration. We feel that the full potential of the Fermilab Tevatron Collider program will only be realized when both of the large detectors are in place and taking data.