E-617 A PRECISION STUDY OF CP-NONCONSERVATION IN $K \to 2\pi$ DECAYS

Bruce Winstein
Enrico Fermi Institute and the Department of Physics
The University of Chicago

R. Bernstein, G. Bock, D. Carlsmith, D. Coupal, J. W. Cronin, G. Gollin, W. Keling, K. Nishikawa, and H. Norton, The University of Chicago; B. Peyaud, R. Turlay, and A. Zylberstejn, CEN, Saclay

Introduction

This experiment is a study of the rates for the long-lived neutral kaon (K_L) to decay into the $\pi^+\pi^-$ or $\pi^0\pi^0$ final states. The existence of these modes of decay, at the level of 10^{-3} in branching ratio, together with some very general assumptions (such as the CPT theorem) tells us that the weak interaction violates CP and T invariance. Specifically we know that the process $K^0 \to \bar{K}^0$ does not occur at the same rate as the "time reversed" process $\bar{K}^0 \to K^0$. This is the only known violation of time symmetry. These processes--a particle turning into its own anti-particle--can occur since the only distinction between a K^0 and a $\bar{K}^0$ is two units of strangeness and the weak interaction does not respect strangeness conservation. As a result of this asymmetry the K_L itself is not a CP eigenstate but rather is an unequal mixture of particle and anti-particle:

$$|K_L\rangle \sim (1+\varepsilon)\,|K^0\rangle - (1-\varepsilon)\,|\bar{K}^0\rangle,$$

where the complex parameter ε has been measured to be $|\varepsilon| \approx 2.25 \times 10^{-3}$.

The issue addressed by E-617 was whether the CP or time symmetry violation is confined to a $\Delta S = 2$ interaction, the "superweak" hypothesis. Were this the case, the decay rates for the K_L into $\pi^+\pi^-$ and $\pi^0\pi^0$ would be exactly in the ratio of the CP conserving K_S decay rates to the same modes.

We then define the amplitude ratios

$$\eta_{+-} = \frac{\text{amp}\ (K_L \to \pi^+\pi^-)}{\text{amp}\ (K_S \to \pi^+\pi^-)}$$

$$\eta_{00} = \frac{\text{amp}\ (K_L \to 2\pi^0)}{\text{amp}\ (K_S \to 2\pi^0)};$$

the superweak hypothesis would then require that

$$\eta_{00} = \eta_{+-}.$$

Motivation

Recent theoretical ideas have given rise to what can be called a "natural" way of accommodating the time-symmetry violation in the so-called standard model and these in turn have motivated several experiments to detect a $\Delta S = 1$ CP nonconserving interaction. In particular, the Kobayashi-Maskawa (KM) model "allows" for CP non-conservation in the weak interaction in a world of six or more quarks. While this model was proposed in 1973, even before the discovery of the (4th) charm quark, the discovery of the (5th) b quark at Fermilab was an important element in the widespread appreciation of the KM model's potential for "explaining" CP non-conservation. The beauty of the KM model is in part that it unifies two seemingly very disparate questions:

(1) Why do the quarks mix in their weak decays (e.g., a c quark can decay to either an s or a d quark)?
(2) Why is time symmetry violated by the weak interaction?

The parameter which controls the $\Delta S = 1$ CP violating interaction in the kaon system is traditionally denoted by ε'. Its relation to the previously defined parameters is given by

$$\frac{\varepsilon'}{\varepsilon} \simeq \frac{1 - \left|\frac{\eta_{00}}{\eta_{+-}}\right|^2}{6}.$$

The predictions for ε'/ε depend upon the top quark mass and other parameters of the KM matrix. As a result of constraints on these parameters by a host of experiments, only a limited range of possible values for ε'/ε is allowed. Although the calculations are uncertain, some conclusions emerge:

(1) ε'/ε is not equal to zero.
(2) ε'/ε is $\gtrsim 0.005$.

Thus, one should see a departure from unity in the quantity $|\eta_{00}/\eta_{+-}|^2$ of a few per cent.

Experimental Technique

This experiment was performed in the M3 neutral beam line. K_L's were produced at about 5mr using 400-GeV protons; the detector was optimized for $\langle p_K \rangle \approx 100$ GeV/c. This arrangement allowed for a good K_L/n ratio, good K_L flux, and superior resolution for the $K_L \to 2\pi^0$ decay mode.

In order to reduce a major source of systematic uncertainty, two side-by-side and distinct K_L beams entered the region of the detector, shown in the figure that follows.

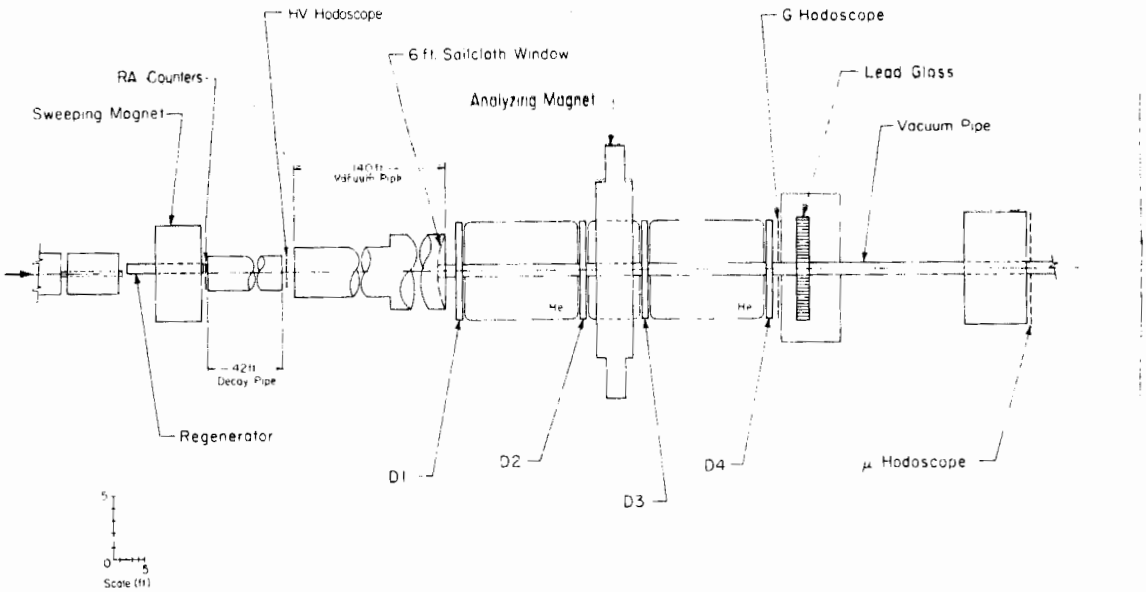

Schematic of the Chicago-Saclay detector

In one of the beams a regenerator, consisting of 1 m carbon and 1/2 in. Pb, was placed to provide a K_S component. K^0 decays were accepted within a 14 m evacuated decay pipe following the regenerator. The data were collected in two phases: the charged and neutral modes. For the charged mode ($\pi^+\pi^-$) running, the trigger required a two particle signature. The tracks were momentum analyzed via a drift chamber spectrometer; thus the invariant mass of the two candidate pions could be reconstructed as well as the decay point which is crucial in determining from which beam the event originated.

This dual beam arrangement has several advantages: no monitor is required as K_L and (the normalizing) K_S decays are collected simultaneously; the detector is equally busy for both K_L and K_S decays; extra "background" tracks produced by the thick regenerator could result in a small loss of events which, however, will be equal for K_L and K_S decays; the roles of the beams are intercharged every pulse by alternation of the regenerator so that any small asymmetries in the detector response are of no consequence.

For the neutral mode ($\pi^0\pi^0$) running, only one change was made to the detector. A thin anti-counter and 0.1 rl lead converter were added immediately upstream of the triggering hodoscope that defined the end of the decay region. By means of this converter, one and only one photon was required to convert; the resultant e^+e^- pair was tracked with the spectrometer, and the pair, together with the remaining three gammas, were then observed in an 804 element lead glass block array as shown in the figure on the next page.

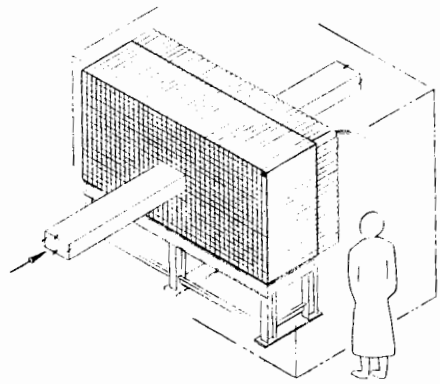

The lead glass array of the Chicago-Saclay experiment

Operation of the Experiment

E-617 was proposed in January, 1979, approved in April, had a brief test run in May, 1981, and a final data taking run between January and June of 1982. The majority of the data came during a 10 week period during which we had primary control over the meson targeting. A major activity during the run was the monitoring of the lead glass array, whose performance was crucial for the $\pi^0\pi^0$ reconstruction. In fact, over the course of the run, only four or five tubes of the 800 ever needed replacement.

Throughout the experiment the drift chambers gave about 200μ resolution while in the lead glass, photon showers could be determined with a (projected) position resolution of about 3 mm and an energy resolution of

$$\frac{\sigma_E}{E} = 2\% + 6\%/\sqrt{E}.$$

Analysis

The analysis of this experiment has taken about two years to complete. The primary difficulty was the reconstruction of the rare $K_L \to 2\pi^0$ mode for which there is copious background. The major steps in the analysis were

(a) the isolation and identification of photon clusters, i.e., patterns of energy deposits in the lead glass which correspond to photons;

(b) the assignment of an energy to each photon. This included correcting for a time dependence in the response of each block and as well for non-linearity;
(c) the reconstruction of the 3-momentum and invariant mass of the candidate kaon from which one could distinguish the two beams;
(d) the understanding, simulation, and subtraction backgrounds;
(e) the simulation of the detector response via Monte Carlo.

The event totals, after subtractions, are given in the table below.

Event Totals for the Chicago-Saclay Experiment

Mode	Events
$K_L \to 2\pi^0$	3142
$K_S \to 2\pi^0$	5663
$K_L \to \pi^+\pi^-$	10676
$K_S \to \pi^+\pi^-$	25752

For comparison, the two most precise previous experiments collected a total of only about 300 $K_L \to 2\pi^0$ events.

The result of the experiment is then

$$\varepsilon'/\varepsilon = -0.0046 \pm 0.0053 \text{ (statistical)} \pm 0.0024 \text{ (systematic)}.$$

The systematic error is primarily a result of uncertainty in the various background subtractions. The result has been checked by a variety of methods which all give a consistent answer: ε'/ε is still consistent with zero and is probably not as large as predicted by the KM model.

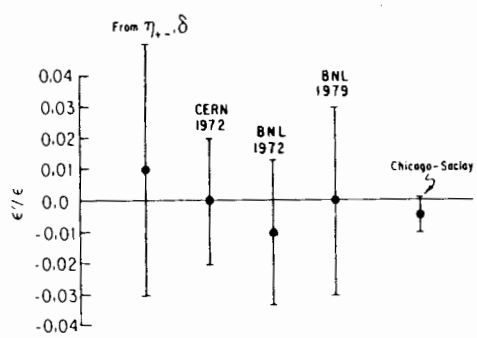

The Chicago-Saclay result in comparison to previous determinations of ε'/ε.

In the preceeding figure we show our result in comparison with three previous efforts (and with a determination using a measurement of the K_L semileptonic charge asymmetry, δ). The figure that follows shows our result compared to recent predictions based upon the KM model. The predicted lower bound for

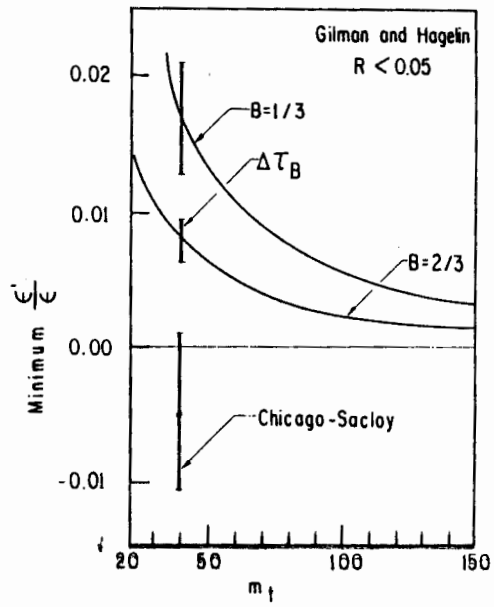

The Chicago-Saclay result in comparison to the lower-bound predictions of Gilman and Hagelin. The dependences of these predictions on the "Bag Factor," B, and upon the experimental error on the lifetime of the bottom quark, τ_B, are shown.

ε'/ε is plotted against the mass of the top quark and we have plotted our point at 40 GeV, the value favored by the $SP\bar{P}S$ results. The agreement is not good and this could signal a new mechanism for CP nonconservation. However, it is clear that an even more precise measurement is called for, and better calculations are needed.

The Future

Several of us, together with some new collaborators (including a Fermilab group) are attempting to measure ε'/ε about five times more accurately than did E-617. That experiment (E-731) which takes advantage of a new Tevatron beam (MC) together with a superior apparatus, should see its first beam in early 1985.

Final Remark

We are happy to here acknowledge the enthusiastic support of the Meson Department, the Computing Department, the Research Division, the Accelerator Division, and the Directorate throughout the course of the experiment which greatly contributed to its success.

An aerial view of the RF Building at F0, showing construction work on the new addition for antiproton-acceleration equipment.

(Photograph by Fermilab Photo Unit)