TRIGGER AND SPECIALIZED COMPUTING HARDWARE FOR THE COLLIDING DETECTOR AT FERMILAB

Myron Campbell
The Enrico Fermi Institute, The University of Chicago

I. Detector Description

The collider detector at Fermilab will provide the first look at 2 TeV center of mass $\bar{p}p$ collisions. The detector has complete calorimetry coverage from 2° to 178°. The central region is instrumented with a silicon vertex detector, a vertex time projection chamber and a large central tracking chamber. A central muon chamber covers the region between 51° and 129°. Muon coverage in the forward region is provided by toroids from 2° to 10° and 170° to 178°. A more detailed description of the detector can be found in the CDF design report.[1]

The $\bar{p}p$ collider at Fermilab will have up to 6 bunched beams with 3.5μsec between crossings. At the design luminosity of $10^{30} cm^{-2} sec^{-1}$ and at 2 TeV center-of-mass energy we expect an inelastic interaction rate of 50,000 events per second. The total number of detector elements is approximately 75,000 with 10% occupancy for typical events. The expected rate for events being written to tape is between one and five Hertz. The trigger system and online processes must perform this factor of 10,000 reduction in event rate.

II. Overview of Data Acquisition System

The trigger electronics and data acquisition system are built to allow the detector to be partitioned into several independent systems. This will be important in the early stages of detector operation when the several different parts of the detector are being brought online. Also operation of the majority of the detector will not be inhibited by the failure of one part. The partitioning scheme will be useful later for maintaining calibrations of the various parts of the detector.

The detector can be divided into a maximum of 64 subunits, each of which can be assigned to any of up to 16 independent partitions. The large number of subunits allow for minimal disruption of the main detector when a piece must be removed for testing or calibration. The limit of 16 independent partitions is set somewhat arbitrarily by FASTBUS broadcast protocol.[2] The cleavage lines for splitting the detector are determined by the scanner and front end card assignments: a scanner and its associated RABBIT crates[3] can be in only one partition. The central calorimeter is divided into 48 wedges each wedge containing the electromagnetic and hadronic calorimetry, strip chambers, and muon chambers. The electronics for the rest of the detector is divided mainly along detector component lines.

CDF is designed to be a multi-purpose, multi-use detector. During data taking there can be several processes active each looking for different types of physics processes and each having different types of signatures. All detector components will be then in one partition. The different classes of events will be selected and tagged by separate trigger algorithms. The events will then be routed to the appropriate consumer process. The consumer process could be in the form of a level 3 trigger which would either reject or pass the event on to be written to tape or an analysis process which maintained online tables and histograms.

The computing power needed to analyze the data acquired from a one month run at 5 Hz is estimated to be one year of available offline resources. It is important to be critical in the event selection to reduce the number of events needing reconstruction.

Dedicated hardware for event reconstruction in the data acquisition system would also greatly reduce the offline computing requirements.

III. Trigger

The trigger system is divided into three levels.[4] The first level examines the signals from selected parts of the detector via dedicated cables. A fast decision based on analog processing and coincidence logic is made in the 3.5 microseconds between crossings. The level one trigger is therefore deadtimeless. Upon receipt of a level one accept the front end electronics is prohibited from resetting and hold the event data in analog sample and holds. The level two trigger then generates a more detailed description of the events. The list used by the level two processors contain information on calorimetry energy clusters, muon candidates and high momentum tracks from the central chambers. These lists are scanned by up to 4 independent trigger processors each of which can be programmed to look for different signatures. Upon the generation of a level two accept the event readout is started. The third level trigger operates on all of the information from the event after it is digitized and read via the scanners.

During the level two trigger and event readout the detector, or the partition involved if multiple partitions are running, incurs deadtime. The goal is to keep the total deadtime at 10%. Contributions to deadtime due to the trigger and the readout are shown in figure 1. Level one reduces the event rate by a factor of ten without deadtime. During the early running of the collider when the luminosity is $10^{28} cm^{-2} sec^{-1}$ level one will be sufficient to reduce the event rate to 50 Hertz. At the design luminosity of $10^{30} cm^{-2} sec^{-1}$ two options are shown for different types of track finders. A simple hardware straight road track finder will have results at the start of level two such that cuts on muon and electron candidates can be made early. A more sophisticated track reconstruction processor using curvature modules incorporating shift registers will not have results available until later in the level two analysis. The difference in event rate is from the expected muon and single electron backgrounds which cannot be rejected without central tracking information.[5]

The trigger system is based on the projective calorimetry of the detector. The electromagnetic and hadron towers are divided into a logical 24 x 42 array of $\Delta\phi = 15°$ and $\Delta y = 0.2$. The energy deposited in each tower is represented by a D.C. voltage and transmitted to the trigger system by dedicated cables (figure 2). The receiver circuits have programmable gains and offsets. The gain is used to convert energy to transverse energy, E_t, by multiplying each signal by $\sin\theta$ where θ is the angle from the proton direction. The offset is used for removing biases during running and injecting test signals during testing. The digital values for $\sin\theta$ and offset are loaded via FASTBUS.[6]

The resulting E_t signals are used in analog processing. The level one trigger sums together all towers in the detector over a preset threshold to generate the total transverse energy. The towers are also weighted by $\sin\phi$, $\cos\phi$, and y to produce the ϕ and y components of energy to be used for a missing energy trigger. The resulting sums, ΣE_t, $\Sigma E_t \sin\phi$, $\Sigma E_t \cos\phi$, $\Sigma E_t y$, are compared to global thresholds and used to generate level one accepts. There are four independent sets of analog summers. The threshold for including a tower in the global sum can be set differently for each of the analog sums. This will allow the total energy threshold for a level one accept to be set high for diffuse events which include a large number of relatively soft particles and still accept events which have a lower total energy but where the energy is concentrated in one or two regions.

After a level one trigger is generated and the front end electronics have been prohibited from resetting, the level two trigger will start. The first task of the level two trigger system is to generate a brief list or table which describes the event. The information generated for the calorimeter is the total energy, position, and width of each cluster

of energy. These are described by $E=\Sigma E_t$, $<y>=\frac{\Sigma Ey}{\Sigma E}$, $<\sin\phi>=\frac{\Sigma E\sin\phi}{\Sigma E}$, $<\cos\phi>=\frac{\Sigma E\cos\phi}{\Sigma E}$, $<y>^2=\frac{\Sigma Ey^2}{\Sigma E}$, and $<\theta>^2=1-\frac{(\Sigma E\cos\phi)^2+(\Sigma E\sin\phi)^2}{\Sigma E^2}$.

The procedure used for finding and summing clusters is now described. The value representing E_t from the receive and weight card is compared to a programmable reference. The output of the comparator is sent to the cluster finder via a digital bus. The first reference level is set high and the towers over this threshold are latched in the cluster finder as seed towers. The threshold is then lowered to a minimum value and towers over this low threshold are stored in the cluster finder's second set of latches. The bus drivers in the compare and sum card are turned off and the cluster finder now returns sets of connected towers. A tower is in a cluster if it is either the selected seed tower or a low threshold tower adjacent to a tower already included in the cluster. The time needed to locate and define a cluster is about 100 nanoseconds and the time needed to make the analog sums for a cluster is about 600 nanoseconds. In order to provide a better match between these two sets of hardware four independent summers are used working in parallel. The throughput for the analog sums is then one cluster per 150 nanoseconds.

The 2016 towers of electromagnetic and hadronic calorimetry are divided between ten FASTBUS crates of analog sum modules. The results of each crate are digitized by the crate sum module and sent to the list makers. The list makers take the serial information coming from the crate sum modules and enter it in a master list. When a cluster crosses a crate boundary the list makers must combine the information into a single entry. The master list is made available to the level two processors.

It is at this master list that all information to be included in the trigger must come together. Muon candidates from the muon chamber and high P_t charged particle track from the central track finder together with the calorimeter information proved a powerful handle on selecting specific signatures.

The muon candidates are generated by requiring a coincidence in two sets of drift cells such that a line pointing to the interaction region is reconstructed. The P_t cutoff and multiple scattering limit can be controlled by adjusting the width of the overlap coincidence in drift times. The signal used for level one will be the OR of all coincidences indicating a muon candidate. During the construction of the calorimeter list the ϕ and Y coordinates of the muon candidates will be generated. The energy in the corresponding electromagnetic and hadronic towers can then be examined, checking that they contain only energy equivalent to a minimum ionizing particle.

There are two methods proposed for producing the list of high P_t tracks from the central tracking chamber. The first method is a sophisticated processor using curvature modules similar to the kind of track finder used at MARK II. This device would reconstruct all tracks, not just the high momentum tracks. The tracking information would not be available to the level two processors until after the lists were constructed. The high multiplicity of particles in an event in a hadron collider would seem to prohibit being able to trigger on low momentum particles - unlike electron-positron colliders where soft pions can be used to tag ψ' or D^* decays. The second type of track processor would look at the first wire in each of nine superlayers which collected charge[7]. A coincidence of wires matching one of 504 predefined roads determined by the outer drift tubes indicates a high momentum particle. The results of this track finder would be available at the beginning of level two processing.

The level two processors are dedicated to the trigger system. The internal architecture is ECL based with the micro sequencer using a bit slice sequencer sequence, the MC10801. The processing element include FASTBUS IO controls, special hardware for manipulating the cluster sum information, and a general arithmetic and logical

processing unit based on the MC10900. The micro- instruction cycle time is 12 nanoseconds. The output of the level two processors will be a level two accept or reject. A level two accept will result in the event being digitized.

IV. Data Acquisition

The majority of the front end electronics is in the RABBIT system (Redundant Analog Bus Based Information Transfer system). There are two separate and independent analog busses in a RABBIT crate, each controlled by a separate module, the EWE. The EWE's are controlled by the scanner (MX)[8] via independent communication links. Each analog channel is then accessible through two separate paths. During normal operation the two paths will be operation in parallel, however, in the event of a component failure in one path all information is accessible through the remaining link. This is important because the front end electronics is located in the collision hall which will have only restricted access. The analog cards designed for the RABBIT system are the strip chamber ADC, muon chamber ADC/TDC, hadron calorimeter ADC/TDC, and electromagnetic ADC.

The scanner used to control and read the RABBIT system via the EWE is called the MX. This is a micro-coded ECL machine specifically designed for this task. The data collected from the EWE is corrected for gain shifts and offsets then stored in one of four buffers from which the event data is assembled by the event builder. The MX has six separate memories (figure 3). Three memories, the DMA, DMB, and DMC, store the operands needed for the a + b*c correction. The list of commands needed to control the EWE is in the UM memory. The event memory, EM, holds the assembled event. The MX's micro-instructions are stored in the 2048 word by 64 bit IM memory which can be loaded via FASTBUS. The instructions are 64 bits wide; the first 32 bits specify the op codes and the second 32 bits specify the operand addresses.

The synchronization between the trigger system and the MX is managed by the trigger supervisor. The start scan message is delivered via a FASTBUS broadcast and the MX done signal is returned via dedicated cables to the trigger supervisor.

Other non-RABBIT electronics must obey the scanner protocol involving receiving a broadcast message, storing data in quadruple buffers and returning done signals. The LeCroy 1800 FASTBUS system[9] is being considered for the tracking readout system. However, since the 1800 system does not obey the scanner protocol a FASTBUS to FASTBUS interface is required. A device under development at SLAC, the SSP[10] (SLAC Scanner Processor), is being considered for use as the 1800 system scanner. This module implements the IBM integer instruction set and has a cycle time of 150 nanoseconds for most instructions. It is a FASTBUS master and slave on both a cable segment and crate segment[11].

V. Level Three Processors

The level two trigger system receives incomplete detector information via dedicated cables. After the event is constructed by the event builder the full data set, gain and offset corrected, in a formatted form is available. A third level trigger using the complete event data will be needed to reduce the rate to a manageable level.

The third level trigger must provide flexible event selection using algorithms developed in a high level language. A processor for level three must have enough memory to contain the 100 to 200 kilobytes of data from an event. The processor must be able to accept the data at 20 megabytes per second from FASTBUS. Current plans for the level three system is a collection of identical processors which are loaded by the buffer manager and pass accepted events to the host VAX[12]. CPU's under consideration are the 3081/E currently under development by a CERN-SLAC collaboration[13], the

168/E and the 370/E. All of these depend upon having FASTBUS interfaces; the choice remains to be made.

VI. Summary

The high event rate and large multiplicity of events expected at CDF present new challenges in online triggering and processing. To meet this challenge an array of new dedicated analog and digital processors are being built. The trigger involves a combination of fast analog and digital techniques. The data acquisition system is designed to provide corrected data from the redundant analog front end.

REFERENCES

1. Design report for the collider Detector Facility (CDF), D. Ayres, et al., Fermilab internal document, CDF 111. August (1981)
2. Design of the Collider Detector Facility Data Acquisition system, A.E. Brenner et al., Fermilab internal document, CDF 108. December (1981)
3 RABBIT System Specifications, T. F. Droege, K. J. Turner, T. K. Ohska, Fermilab internal document, PIN-52. July (1983)
4. Status of the CDF Trigger, M. Campbell, et. al., Fermilab internal document, CDF-157. February (1983)
5. Central Tracking for Electron Triggers, M. Shochet, University of Chicago internal document, TGN-13. March (1983)
6. FASTBUS Modular High Speed Data Acquisition and Control System for High Energy Physics and Other Applications, U.S. NIM Committee, DOE/ER-0189. December (1983)
7. Charged Particle Tracking in CDF, M. Atac, et. al., Fermilab internal document, CDF-178. September (1983)
8. The MX Hardware Description, K. J. Turner, Fermilab internal document, PIN-116. February (1894)
9. System 1800 Data Acquisition System, LeCroy Research System Corporation, April (1983)
10. FASTBUS Interface for TDC Crates, T. Carroll, Fermilab internal document, CDF-214. February (1984)
11. SLAC Scanner Processor, T. Glanzman, SLAC internal document, MKII/FASTBUS Note #2. October (1983)
12. Level 3 Processors, T. Carroll, Fermilab internal document, CDF-188. October (1983)
13. The 3081/E Processor, P. E. Kunz, et. al., paper presented at Impact of Specialized Processors in Elementary Particle Physics, Pavoda, Italy. (1983)

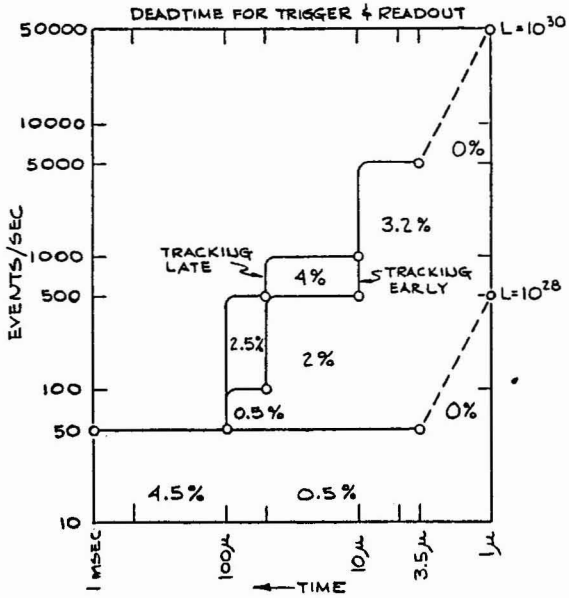

Figure 1. Dead time for trigger and readout for various event rates. Note time increases from right to left.

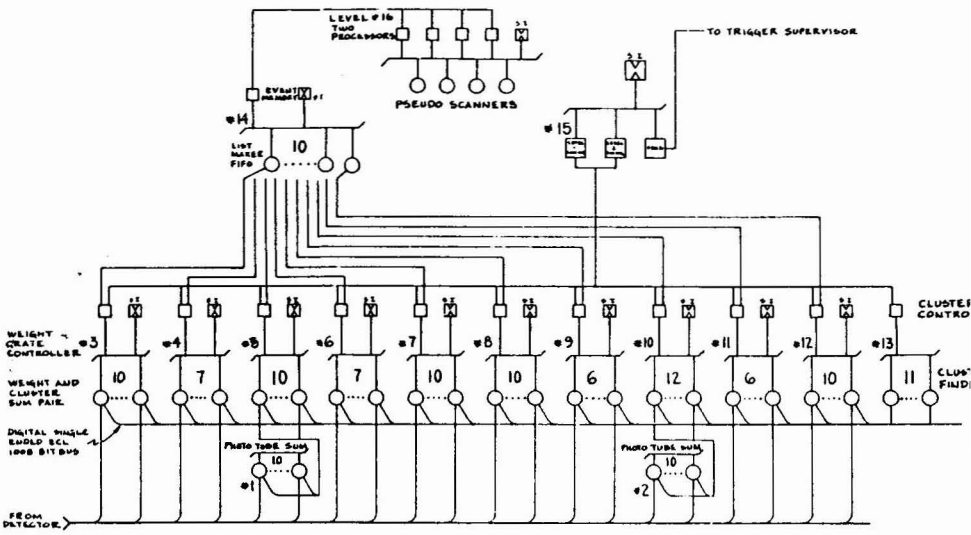

Figure 2. Diagram showing all crates involved in the calorimetry trigger. S.I.'s are segment interconnects.

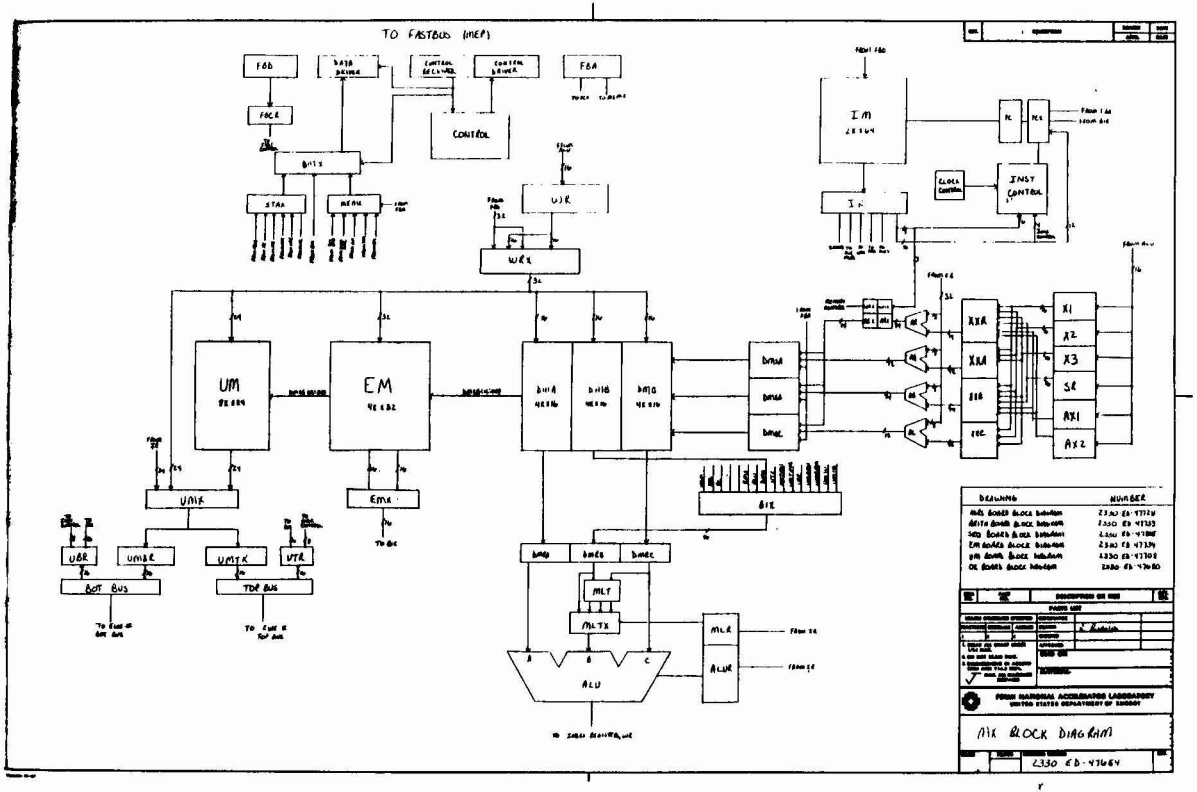

Figure 3. Scanner (MX) block diagram

QUESTIONS AND ANSWERS

Q: How does MX compare with, say, a VAX? Could the MX have been replaced by a commercially available processor?

D. Kaplan

A: Simulation indicates the MX is 2-3 times as fast as a 3081E, or around 10 VAX 780's. But probably the main motivation for building was that it was fun for the people who did it.