E-609

FERMILAB-PUB-83-114-E
ANL-HEP-PR-83-26
UPR-115E
WIS 83-511

Hadron Jets in 400 GeV pp Collisions

E-609 Collaboration

M. W. Arenton,[1] H. Chen,[7a] M. Corcoran,[6] L. Cormell,[5] W. R. Ditzler,[1] M. Dris,[5b] A. R. Erwin,[7] T. Fields,[1] J. Fleischman,[5] E. Gardella,[5] R. Gustafson,[4] M. Harrison,[2] R. Hollenhorst,[7] M. A. Hasan,[7] C. Hitzman,[5c] K. Johns,[6] A. Kanofsky,[3] W. Kononenko,[5] C. E. Kuehn,[7] H. E. Miettinen,[6] C. Naudet,[6] K. S. Nelson,[7] J. Rice,[6] J. Roberts,[6] B. Robinson,[5] W. Selove,[5] G. Theodosiou,[5] M. A. Thompson,[7] B. Yost[5d]

(1) Argonne National Laboratory, Argonne, Illinois 60439
(2) Fermi National Accelerator Laboratory, Batavia, Illinois 60510
(3) Lehigh University, Bethlehem, Pennsylvania 18015
(4) University of Michigan, Ann Arbor, Michigan 48109
(5) University of Pennsylvania, Philadelphia, Pennsylvania 19104
(6) Rice University, Houston, Texas 77001
(7) University of Wisconsin, Madison, Wisconsin 53706

May 18, 1983

Abstract

In events triggered on total transverse energy and in events obtained using another geometrically unbiased trigger, hadron jets are clearly seen at $\sqrt{s}$ = 27.4 GeV. The evidence for this, obtained in Fermilab experiment E-609, is presented. Cross sections for global, single-arm, and double-arm triggers detecting high E_t events are also given.

Submitted to Physical Review Letters

High transverse momentum clusters of particles (jets) have been observed in many kinds of hadron experiments for almost 10 years.[1-3] The present generation of calorimeter triggered high-p_t experiments have large solid angle, full azimuth, coverage. Recent results from the CERN SPS collider have shown spectacularly clear jet pair events.[4-5] At Fermilab/SPS energies, $\sqrt{s}$ 20 to 27 GeV, however, the situation has been confused by the results of experiments NA-5[6] and E-557,[7] which show that if one uses a simple total transverse energy trigger, the so-called global trigger, jet-pair events are not dominant. Recently, several different theoretical calculations[8-11] have offered explanations of why the global trigger can be expected to pick up many times more "soft" events (events with a large number of low p_t particles) than hard ones, so that globally triggered events in this range of s would not be dominantly jet-like. Nevertheless, the first NA-5 results showed that even with a global trigger a few percent of the events appeared to be very jet-like.[12-13]

Here we report results from a new experiment, E-609 at Fermilab, and show that events occur with clear jet-pair characteristics - two relatively concentrated clusters of particles, approximately co-planar, with little E_t in the off-cluster regions; that the frequency with which they occur can not be accounted for by simple random fluctuations of uncorrelated particles; and that with other, also geometrically unbiased, triggers, jet-pair events can be detected with much less contamination of the data sample by "soft" non-jet events.[14] It simply happens that a global trigger responds not only to jet events but also to soft events, with cross section, at these s and E_t values, about 20 times larger than the cross section for jet events.

The E-609 apparatus is shown in Fig. 1. The heart of the apparatus is an 8-sr segmented calorimeter, which is divided into 132 towers consisting of a lead-scintillator module and 3 iron-scintillator modules. The apparatus also included another calorimeter to measure the energy going forward through the beam hole of the main calorimeter, a magnetic spectrometer (with a p_t kick of 100 MeV/c), and an imaging Cerkenov counter.

We report here on 400 GeV/c p-p interactions. The calorimeter was calibrated by steering beams of muons through each module to equalize their pulse height responses, and then the absolute calibration was determined by steering hadron beams into the array. The transverse momentum scale is known to ± 7% from the calibration. For this present analysis a particle-finding algorithm was used on the calorimeter information to obtain the momenta of individual particles hitting the calorimeter. The magnetic spectrometer was not used in the present analysis.

The experimental triggers summed the transverse energy (E_t) over various groups of the towers. A minimum thresold was required on the E_t sum for the trigger to be satisfied. Here we consider five out of many trigger types for which data were taken. These are: the global trigger, which summed the entire calorimeter, the "2-high" and "4-high" triggers which are described below, a single-arm trigger formed from a contiguous group of towers on one side of the calorimeter and a double-arm trigger formed from two such groups on opposite sides of the calorimeter. Figure 2 presents the measured cross-sections for three triggers: the global trigger, a single-arm trigger of 1.8 sr solid angle centered at $\theta_{cm} = 85°$, and a double-arm trigger of 2 opposite 1.8 sr regions also at $\theta_{cm} = 85°$. The values and E_t dependence of these cross sections are in good

agreement with the 400 GeV results of E-557,[7] within the energy scale uncertainties.

Some events with a jet-pair appearance were already reported by NA-5, using a global trigger.[12-13] We also find many events with a very clear apparent jet-pair character. Can they be accounted for simply as random fluctuations? One method to address this question is to generate random events by a Monte-Carlo calculation using the experimental p_t and θ_{cm} distributions of individual particles in global trigger events. We then compare the number of random events having a jet-pair character with the number in the real event sample, using the same cuts in both cases.

To perform such a test, we studied the structure of a sample of global trigger events with E_t between 13.4 and 15.0 GeV. A jet-finding computer algorithm was used to select events having two jets, coplanar to within ± 30 degrees, each with more than 4.5 GeV/c p_t in a 45 degree half-angle cone. Out of 17068 events 582, or 3.41 ± 0.14 percent, showed such jet structure. By contrast, in a sample of random events (having the same single particle spectrum, as described above) 1.45 ± 0.07 percent showed such jet structure. The random events were required to have a distribution of transverse momentum unbalance in the calorimeter similar to that of the real events; the final result is, however, insensitive to this requirement. This analysis provides clear evidence, at a statistical level of 12 standard deviations, that the global trigger event sample contains several percent of events with a clear di-jet structure, and that about half of these di-jet events are a manifestation of dynamical effects rather than random combinations of uncorrelated particles.

Another way to study the jet content of the data is by using the standard variable planarity (P).[15] Jet-like events will have $P \gtrsim 0.8$. In Figure 3a we show the P distribution for global trigger events with total E_t greater than 12.5 GeV. This distribution is very similar to those of NA-5 and E-557. We show also the planarity distribution after the particle p_t vectors for each event are randomized in azimuth. This randomization procedure preserved, for each event, its actual p_t unbalance in the calorimeter, which averaged about 1 GeV/c. The two planarity distributions are not very different, except at P above about 0.8, where, in fact, the randomized distribution is about half of the data distribution. This indicates, in agreement with the different analysis described in the previous paragraph, that a few percent of the global trigger events are jet-like, and that approximately half of the jet-like events are dynamical rather than random.

We have also studied other geometrically unbiased triggers which could be expected to reduce the number of soft events while retaining, with good efficiency, events with hard structure, by requiring the presence of several particles of at least medium high p_t. Planarity distributions for two of these triggers are shown in Figs. 3b and 3c. Figure 3b shows the P distribution of a "2-high" hardware trigger, which required that any two calorimeter towers each have at least 1.5 GeV p_t. Figure 3b shows that the P distribution is concentrated at much higher average P than for the global trigger. In the P distribution of the events after randomization (dashed histogram) the fraction of high-P events drops substantially (about 50% for $P > 0.8$), indicating as above that many of the high-P events contain correlated structure.[16]

If one requires several towers, regardless of their location, to have higher than average p_t, one finds that the events are even more planar. Figure 3c shows the P distribution of those events that in addition to satisfying the 2-high trigger have at least two additional towers with p_t above 0.7 GeV each. For P above 0.85 the randomization reduced the number of events to about one-third of the original number, indicating that a substantial majority of these events contain correlated structure. It is to be emphasized that this 4-high trigger, like the 2-high, has no geometrical bias toward selecting events with a di-jet structure.

Figure 4 shows three-dimensional displays of typical events selected by the global and 2-high triggers. Figure 4a is a global trigger event with P near the maximum of the distribution while Fig. 4b is a 2-high event at high P where the above analysis indicates a substantial proportion of true jet events.

Previous large solid angle experiments at these energies have focused on the fact that with a global trigger most of the events do not show high planarity.[6-7] This paper demonstrates, however, that even with a global E_t trigger, jet-pair events can be shown, in model-independent analysis, to occur at a rate that cannot be attributed to random fluctuations of uncorrelated particles. Moreover, by the use of other triggers, still geometrically unbiased, such as the 2-high trigger, a much enriched sample of jet events can be obtained. We will report elsewhere a detailed study of jet cross sections obtained using these and other triggers.

The confusion which has been caused by the so-called NA-5 puzzle, that is, the fact that with the global trigger at this $\sqrt{s}$, only a few percent of the recorded events are jet-pair-like, thus has little to do with the question of

whether jet pairs can be seen clearly. The global trigger simply collects many other events in addition to collecting these jet-pair events.

We wish to thank the Fermilab staff for their efforts which made this experiment possible. This work was supported in part by the U.S. Department of Energy.

References

(a) Present address, University of Science and Technology of China, Hefei, Anjui, Peoples Republic of China.

(b) Present address, NRC Democritos, Athens, Greece.

(c) Present address, Charles Evans Associates, 1670 S. Amphlett Blvd., Suite 120, San Mateo, California 94402.

(d) Present address, LeCroy Research Systems Corporation, 700 Main Street, Spring Valley, New York 10977.

1. Physica Scripta, 19, pp.69-202 (1979). This issue includes references to the earliest work, all done at the ISR.

2. C. Bromberg et al., Nucl. Phys. B171,1 (1980).

3. M. D. Corcoran et al., Phys. Rev. Lett., 44, 514 (1980), Phys. Rev. D21, 64 (1980).

4. UA-2: J.-P. Repellin in Proceedings of the 21st International Conference on High-Energy Physics, Paris, edited by P. Petiau and M. Porneuf, Les Editions de Physique, Paris, 1982, p. C3-571. and M. Banner et al., Phys. Lett. 118B, 203 (1982).

5. UA-1: G. Arnison et al., Phys. Lett., 123B, 115 (1983).

6. C. DeMarzo et al., Phys. Lett., 112B, 173 (1982), and Nucl. Phys. B211, 375 (1983).

7. B. Brown et al., Phys. Rev. Lett., 49, 711 (1982).

8. R. Singer, T. Fields and W. Selove, Phys. Rev. D25, 2451 (1982).

9. R.D. Field, G.C. Fox and R.L. Kelly, Phys. Lett. 119B, 439 (1982).

10. T. Åkesson and H.-U. Bengtsson, Phys. Lett., 120B, 233 (1983).

11. R. Odorico, Phys. Lett., 118B, 151 (1982).

References (continued)

12. J. R. Fry, report to the International Meeting on Fundamental Physics, Ronda, Spain, 1980.

13. K. Pretzl, private communication.

14. The essence of the present results has been reported at the Paris Conference, W. Selove, Ref. 4, op. cit., p.C3-131.

15. See Ref. 6 for a definition and results.

16. Further properties of the 2-high events are described in Ref. 14.

Figure Captions

Figure 1 Diagrams of the E-609 apparatus. a) Plan view, DC-drift chambers, V-veto counters, CID-Cerenkov detector. b) Cross section showing the transverse segmentation of the calorimeter. The dashed lines show center-of-mass polar angles for 400 GeV/c p-p interactions.

Figure 2 Differential cross sections $d\sigma/dE_t$ for the global trigger, a single-arm trigger and a double-arm trigger described in the text. E_t is the transverse energy in the trigger region. Statistical errors only are shown. The lines are fits to exponential forms.

Figure 3 Planarity distributions for the global (a), 2-high (b), and 4-high (c) triggers described in the text. All events were required to have global E_t greater than 12.5 GeV. The solid histograms are the data and the dashed histograms are the data after the p_t vectors have been randomized.

Figure 4 Sample events of the global and 2-high triggers. The height of the box above the plane depicts the transverse energy in that calorimeter tower. Both events have the same E_t scale and the highest point in b is 2.78 GeV.

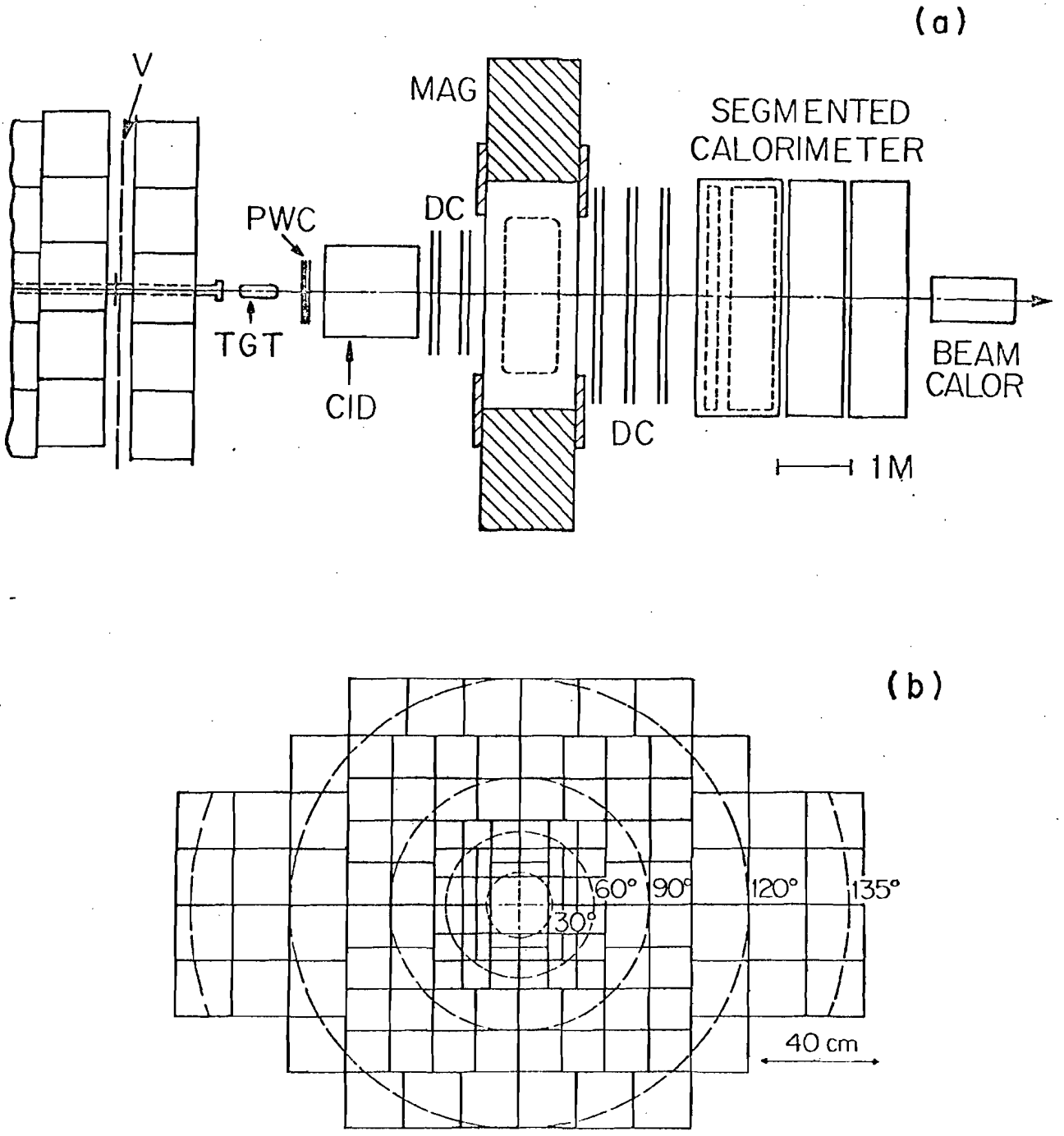
(a)
V
MAG
SEGMENTED
CALORIMETER
PWC
DC
TGT
CID
DC
BEAM
CALOR
1M
(b)
60°
90°
120°
135°
30°
40 cm

Figure 1

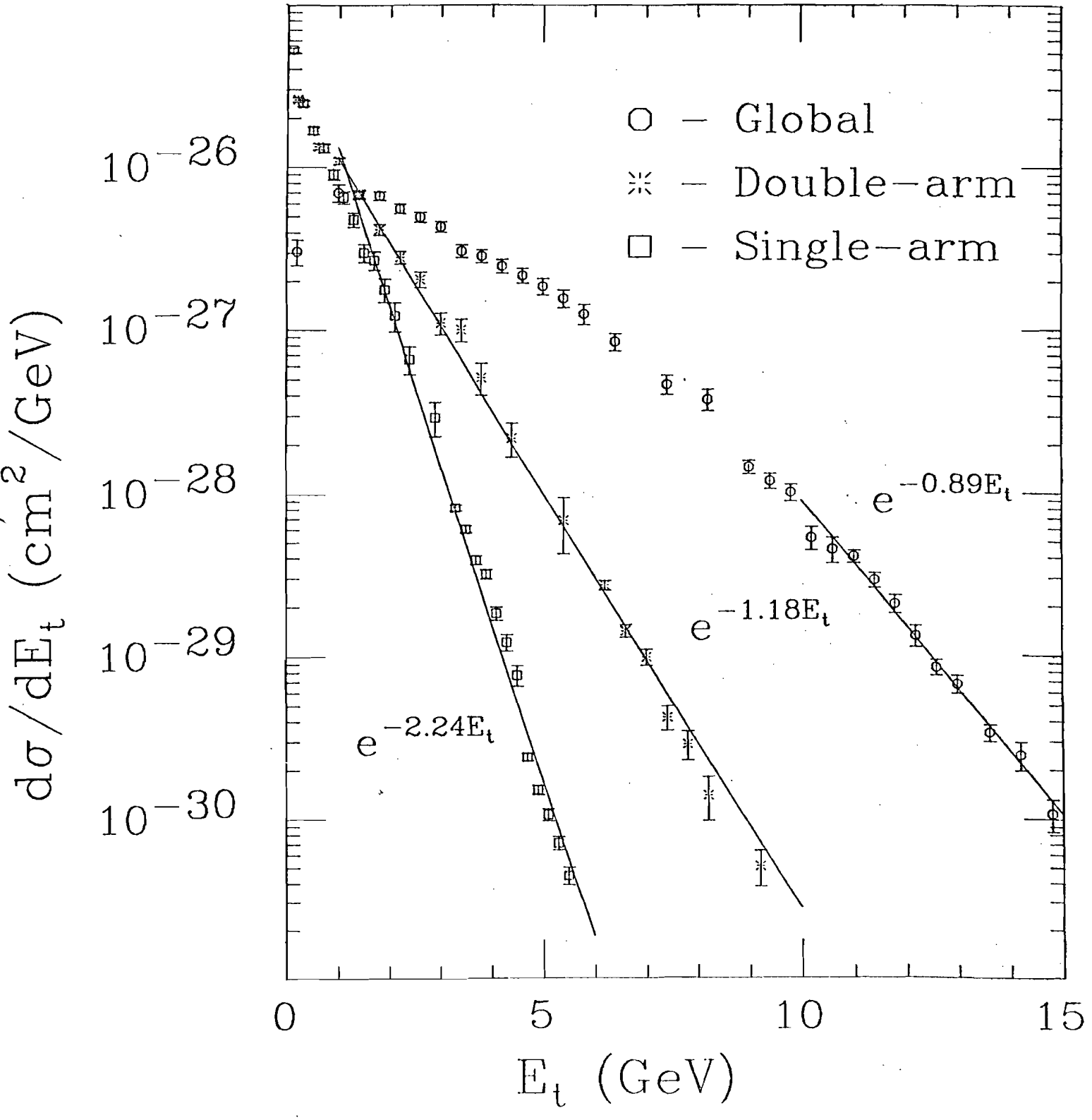
Global
Double-arm
Single-arm
10^{-26}
10^{-27}
10^{-28}
10^{-29}
10^{-30}
$d\sigma/dE_t$ (cm^2/GeV)
$e^{-0.89E_t}$
$e^{-1.18E_t}$
$e^{-2.24E_t}$
0
5
10
15
E_t (GeV)

Figure 2

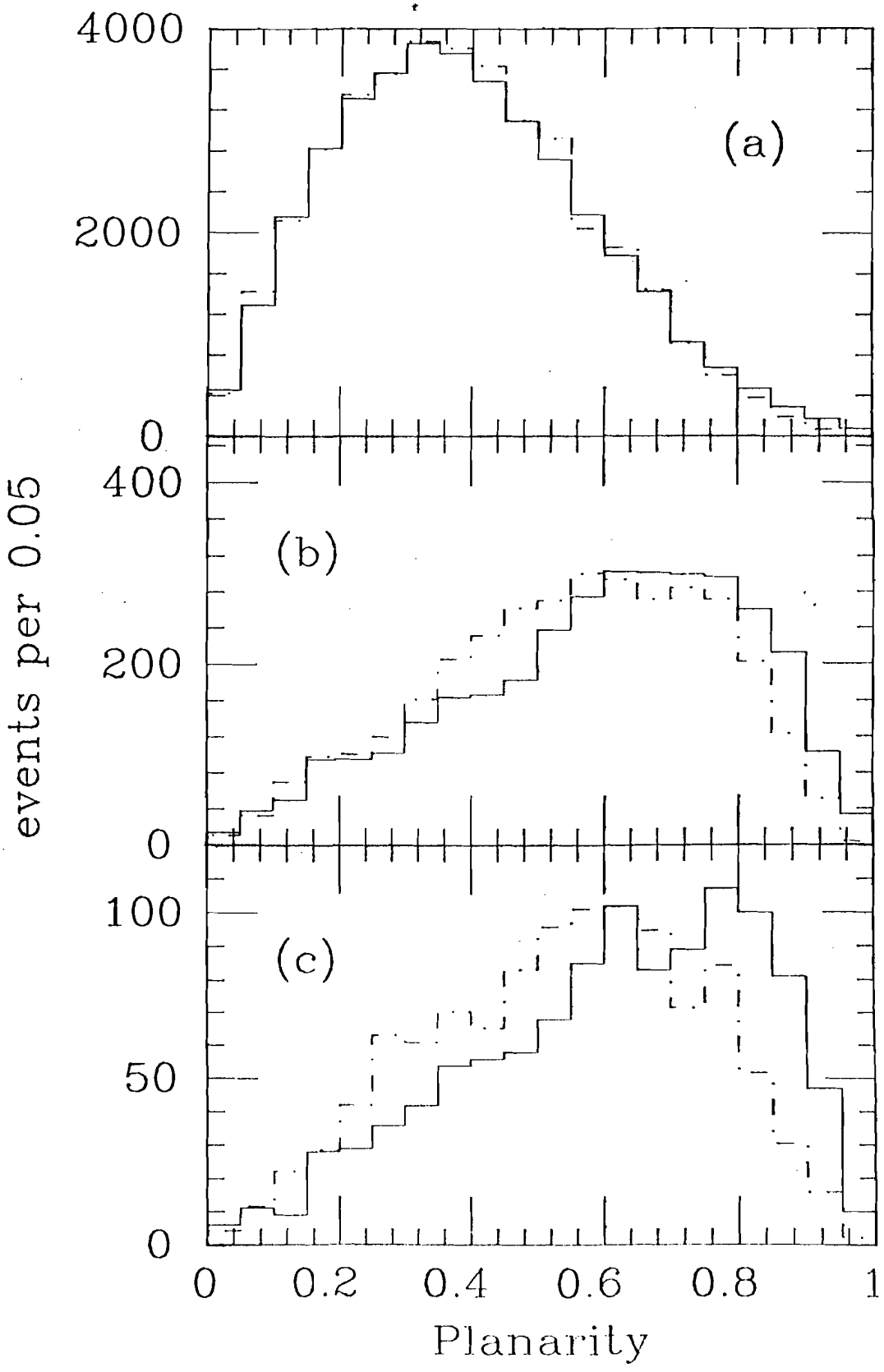
4000
2000
0
400
200
0
100
50
0
(a)
(b)
(c)
events per 0.05
0
0.2
0.4
0.6
0.8
1
Planarity

Figure 3

(a) Global trigger $E_t = 14.8$ $P = 0.26$

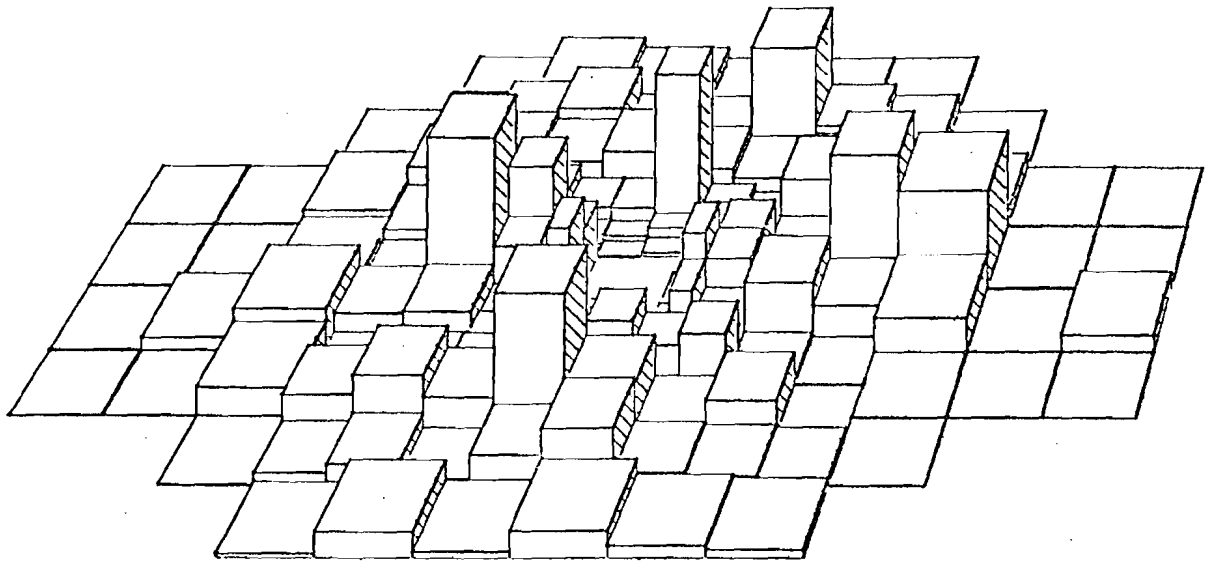
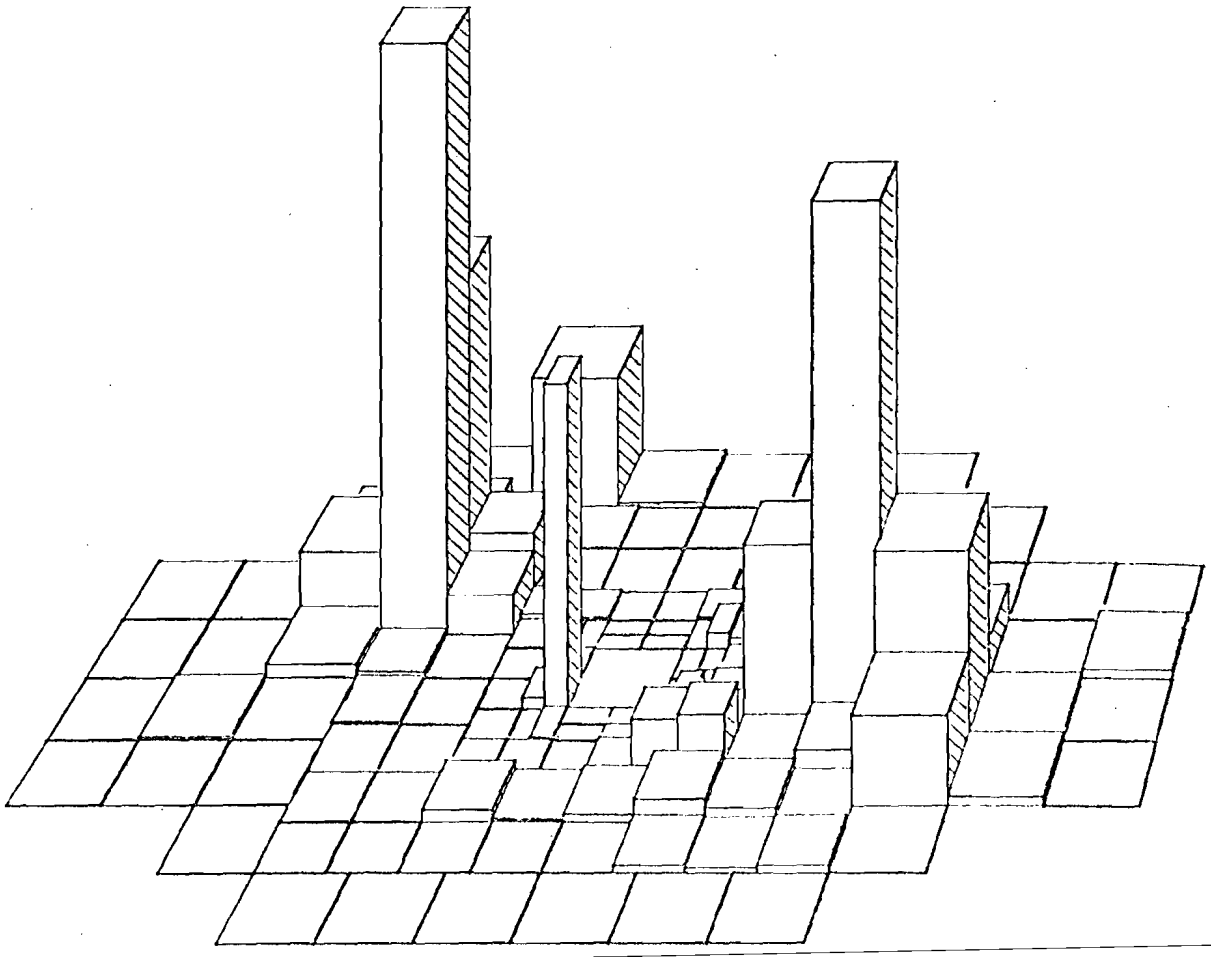
(b) 2-high trigger $E_t = 14.4$ $P = 0.84$