# The Fermilab Tevatron: Vacuum for a superconducting storage ring

C. L. Bartelson, H. Jöstlein, G. M. Lee, P. J. Limon, and L. D. Sauer

*Fermi National Accelerator Laboratory,*[a] *Batavia, Illinois 60510*

(Received 27 September 1982; accepted 29 November 1982)

A description of the vacuum system of the Fermilab Tevatron, a 1000-GeV accelerator/storage ring, is presented. One-eighth of the ring has been operated for five months at cryogenic temperatures, and with power to the magnets. Results from those tests relevant to the vacuum system are presented.

PACS numbers: 29.20.Dh, 07.30.Hd, 07.30.Kf

## I. INTRODUCTION

For five months, from February to June of 1982, extensive cryogenic and power tests were performed on a 750-m section of the Fermilab superconducting accelerator, the Tevatron. More than 150 cryogenic components, constituting one-eighth of the whole accelerator, were installed in the main ring tunnel, leak-checked, and cooled to liquid helium temperatures. The test included the operation of 118 superconducting magnetic elements at current levels corresponding to 950 GeV.

The successful operation of a cryogenic system on this scale, the largest in the world to date, is critically dependent on a complex vacuum system. In this paper, we will describe the vacuum system and the results of the five month test as it applies to the vacuum system.

## II. DESCRIPTION OF THE TEVATRON VACUUM SYSTEM

### A. Three vacuum systems

The vacuum system consists of three different systems, each with its own particular characteristics and requirements: (1) Cold beam tube: Vacuum sections in which the beam tube is at cryogenic temperature (about 4.6 K). (2) Warm beam tube: Vacuum sections in which the beam tube is at room temperature, comprising 7.5% of the 6-km ring. (3) The cryostat insulating vacuum which is completely separate from the two systems above.

#### *1. The cold beam tube*

The beam tube is divided by gate valves into 30 sections which coincide with the 24 cryogenic sections, each about 250 m long, and six long straight sections, each about 50 m long. The beam tube is cold except in the six long straight sections and some 23 short straight sections.

The pressure in the cold beam tube is expected to be immeasurably low if helium leaks are absent. Machine requirements during colliding beam operation are for $5\times10^{-11}$ Torr cold, which corresponds to $5\times10^{-10}$ Torr as measured in a warm stub attached to the cold beam pipe every 30 m. The pressure measured in such a stub results from a balance between the pumping due to the cold pipe, the outgassing of the warm stub, and the outgassing or net pumping of the gauge. These effects are minimized by a large conductance of the stub [17 l/s (liters per second)] and baking the warm stub during system cooldown.

In case there is a helium leak into the beam tube, the gas will initially condense on the surface near the leak. Only when the wall coverage exceeds $10^{-3}$ monolayers, will the pressure begin to be measurable,[1] at about $1\times10^{-11}$ Torr. Helium will then begin to migrate along the pipe, coating it with $10^{-2}$ to $10^{-3}$ monolayers. This trapped gas corresponds to $10^{-4}$ to $10^{-5}$ Torr of warm helium gas in a pipe of that cross section; i.e., a great quantity of gas can be pumped this way before the pressure rises noticeably. When the gas front reaches one of the ion pumps, its progress is stopped. The gas on the walls will only evolve when the system is warmed up the next time.

Because of the difficulty of pumping on a cold beam tube, it is extremely important that there be very few leaks. On the other hand, because there is no outgassing of the tube when it is cold, and because even hydrogen diffusion is inhibited,[2] it seems unnecessary to bake the tube *in situ* or otherwise degas it. The only treatment is to wash the tube in a caustic degreasing agent and a nitric acid pickling bath and maintain a clean environment for it. The tube material is 304L stainless steel sheet with a matte 2D finish. The finish is chosen because it has a high ratio ($>3$) of real surface area to apparent surface area and thus a high capacity to pump helium and hydrogen on its surface. The tube is rolled to approximate shape, machine TIG-welded, drawn to final shape, and annealed.

A key point in the design of the cryostat is that, apart from the seam weld, there are only two end welds made on the beam pipe that face liquid helium. Those welds are made in such a way that if they leak, the helium goes into the insulating vacuum, not into the beam tube. All other welds, bellows, and seals are in the insulating vacuum. This means, for example, that a leak in a beam tube seal must be very large to be of any consequence because the insulating vacuum is better than $10^{-7}$ Torr when cold.

The requirement that there be no beam tube leaks larger than one which will admit enough liquid helium in a year (typical time between warmups) to cover the walls with one-thousandth of a monolayer is very strict in terms of conventional leak checking. It corresponds to a leak rate of $4\times10^{-14}$ Torr l/s for warm helium gas. We have developed an accumulation method which reaches the required sensitivity. During the time a magnet has its magnetic properties measured it is maintained full of liquid helium for approximately 16 h. If the beam tube volume is sealed off during this period one can relate the quantity of helium released during

 © 1983 American Vacuum Society 

the subsequent warmup to the size of a hypothetical leak. This measurement is done using a continuous record from a mass spectrometer, which shows helium, hydrogen, and nitrogen peaks appearing sequentially during warmup. An equivalent sensitivity of $10^{-4}$ monolayers per year of operation was achieved. This measurement was performed on only a small fraction of the dipoles because of the effort involved. No leaks were found.

The decision, made early in the design process, to use a cryogenic beam tube was basically one of economics. The use of a room temperature beam tube would have required much more conventional pumping, *in situ* high temperature baking, sophisticated surface treatment, and a larger magnet coil diameter in order to accommodate insulation between the cryostat and the beam tube.

A pressure instability could occur because the beam ionizes residual gas molecules which are accelerated to the wall by the beam potential. When these ions hit the wall they desorb molecules which in turn can be ionized by the beam. For sufficiently high currents and desorption this process can be divergent, causing local pressures high enough to destroy the beams.[3,4] Desorption from cryogenic walls with high coverage is known to be large.[5]

The Tevatron operates in two modes; an accelerator mode with 1000 bunches of about $2\times10^{10}$ protons each and a collider mode with six bunches of about $2\times10^{11}$ protons each. In the worst case the calculated critical current is more than a factor of 30 above the operating current, even for coverages of three monolayers.

Recently, experiments have been done at the ISR storage rings at CERN to verify that a cold bore section will perform well with high beam currents.[6] In these experiments a cold section of 1.3 m in length was inserted into one of the rings and covered with as many as ten monolayers of hydrogen. 36 A was circulated in the machine for 6 h with no apparent pressure bump effect.

The beam tube is pumped initially with mobile, cold-trapped, turbopump stations ("pump carts"), and thereafter with small (25 l/s) diode-type ion pumps at 60-m spacings. The ion pumps maintain the vacuum during periods when the tube is warm and are used for pressure monitoring and beam tube valve interlocks. They are supplemented with Bayard Alpert nude ion gauges every 120 m.

The beam tube valves are located in short warm sections and use an elastomer seal on the gate while employing copper knife edge flanges, a metal bellows stem seal, and metal bonnet seal. The elastometer used is ethylene–propylene[7] whose radiation tolerance of $10^9$ rad is ten times higher than that of Viton, while maintaining similarly low outgassing rates.

## 2. *The warm beam tube*

There are six long straight sections of about 60 m in length and 23 other warm sections ranging from 2 to 16 m in length. These contain warm devices such as accelerating cavities, wire septa, Lambertson septa, kicker magnets, and so on. It turns out that warm/cold transitions can be constructed without great heat loss or other problems. The cryogenic piping and power is carried around the short warm regions in a bypass transfer line, as shown in Fig. 1(c). No special precautions are taken to keep gas from migrating from warm to cold regions of the beam tube. Short warm pipes without any devices in them consist simply of a clean piece of pipe, without any pumps, gauges, or valves. Longer tubes are equipped with ion pumps and a small number of Bayard Alpert gauges. In any case the beam tube is thoroughly cleaned and either baked to 350–400 °C prior to installation or *in situ*. All connections are done with stainless steel knife edge flanges and copper gaskets. The average pressure in warm sections is required to be $1\times10^{-8}$ Torr or less.

A device of particular interest is the Lambertson magnetic septum. These magnets have their soft steel laminations exposed to the beam vacuum edge on. They are potentially virtual leaks of devastating size. We have found a method to obtain very low outgassing in those devices. To this end we do these steps: (a) Laminations are punched from phosphate covered soft steel as usual. (b) They are vacuum-baked to 800 °C for a few hours, in loosely filled wire baskets. (c) Laminations are stacked using clean fixtures and white gloves. (d) After the pole piece is encased in its stainless steel vacuum jacket, the whole piece is baked to 350 °C under vacuum for two days. (e) The rest of the magnet, including coils, is assembled. The finished magnet may now be let up to dry nitrogen, or even air, and will return to its original low outgassing provided water vapor is removed by baking it to about 140 °C. With only 100 l/s pumping speed on a 6-m magnet, we obtain pressures in the $10^{-9}$ Torr range.

## 3. *Cryostat insulating vacuum*

The static heat load on the cold crysostat parts is due to thermal radiation, heat conduction through structural elements, and through the residual gas. For our cryostats, a cross section of which is shown in Fig. 2, we find that the static heat load doubles for a cryostat pressure of $2\times10^{-5}$ Torr of helium. We require, therefore, a pressure well below $10^{-5}$ Torr, which, if it is due to helium, reads $3\times10^{-6}$ Torr on a cold cathode ionization gauge calibrated for nitrogen. Our experience has been that in a good leak-tight system the vacuum is better than that; in fact, it is usually less than $10^{-7}$ Torr. The major difficulty in achieving a good insulating vacuum is the location and elimination of leaks. To facilitate this task, the insulating vacuum has been subdivided into 210 sections by permanent vacuum barriers in each of the "spool pieces." These sections, shown in Fig. 1(a), are the basic unit of the cryostat vacuum system. In addition to facilitating leak checking, they also limit the migration of gas in the event of catastrophic vacuum failure.

The insulating vacuum is produced and maintained by 48 turbomolecular pumps around the ring at 120-m spacings, one of which is shown in Fig. 1(b). Even though the conductance through a single magnet cryostat is only of the order of 1 l/s, these pumps maintain the cryostats near $10^{-2}$ Torr when warm. We built 20 cryostats using superinsulation with a 2.5% open hole pattern punched into it; the pump-down characteristics were quite similar to those of cryostats with unpunched superinsulation.

The pump stations use 160 l/s Sargent Welch Model 3120

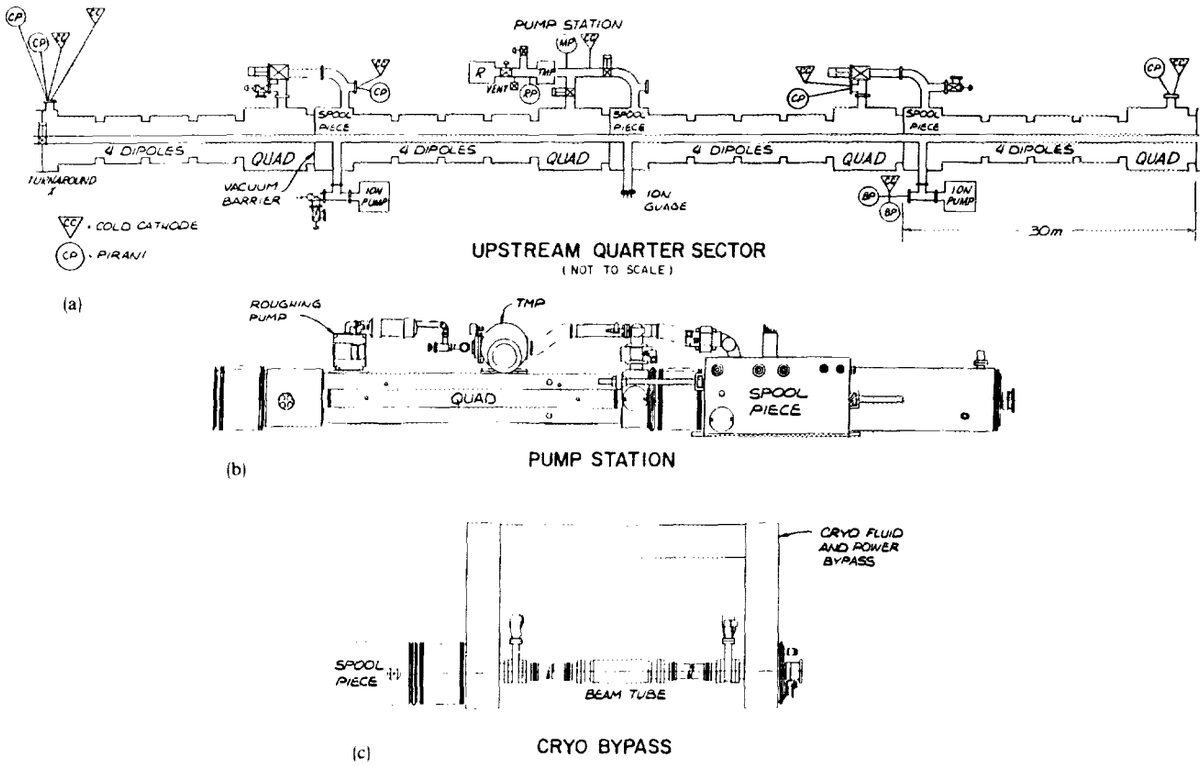


FIG. 1. (a) Schematic of the upstream half of a quarter-sector. (b) A turbopump station at a quadrupole–spool interface. (c) A cryogenic bypass, showing two warm/cold interfaces, and a warm beam tube.

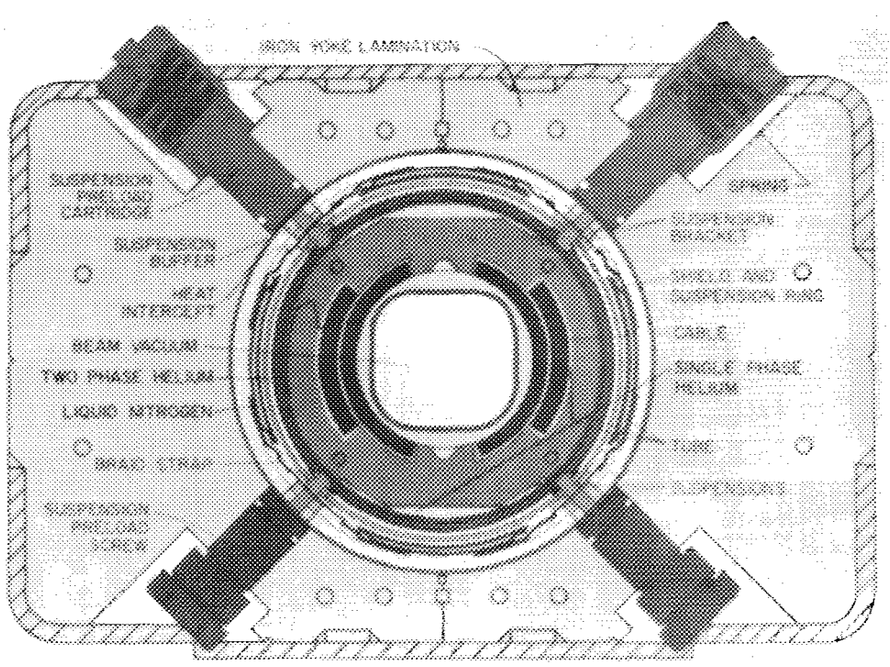

FIG. 2. Cryostat cross section for a Tevatron dipole magnet.

turbopumps, backed by Edwards model EDM12 forepumps. Flex hose stuffed with copper pot scrubbers is used to retard oil migration. These flex hoses are replaced and cleaned on every oil change. We were unable to find any foreline trap that would protect against oil migration better than this simple arrangement. Whenever a pump station is shut down, it is automatically vented to atmosphere to halt oil propagation. Since pumping speed is not important, the forepumps are run at 33% reduced speed to decrease their operating temperature by 10 °C, and increase their reliability.

It is possible, especially in a newly assembled string of magnets, to have small helium leaks in the cryostats. If the pressure due to one of these leaks threatens to increase the heat leak into the cryostat, we attach a mobile turbopump to the magnet in question. These carts are built without any solid state electronic devices (to make them radiation resistant) and are interlocked to close their valve under a variety of failure conditions, so they can be left in the tunnel unattended for long periods of time. With this system we have never yet had to warm up to repair a vacuum leak, except when we have had catastrophic failures of the vacuum system due to electrical arcs or overpressure.

## B. Control and monitoring

The Tevatron vacuum system employs 366 Pirani gauges, 276 cold cathode ion gauges, 62 Bayard Alpert ion gauges, 194 ion pumps, 254 electropneumatic valves, and 48 roughing pump/turbo stations, all with computer control and readout.

The system is segmented into 30 individual "houses," each of which corresponds to one of the 24 cryoloops or six warm sections. These houses communicate with a central computer system via a 10-MHz serial data link. Figure 3 is a

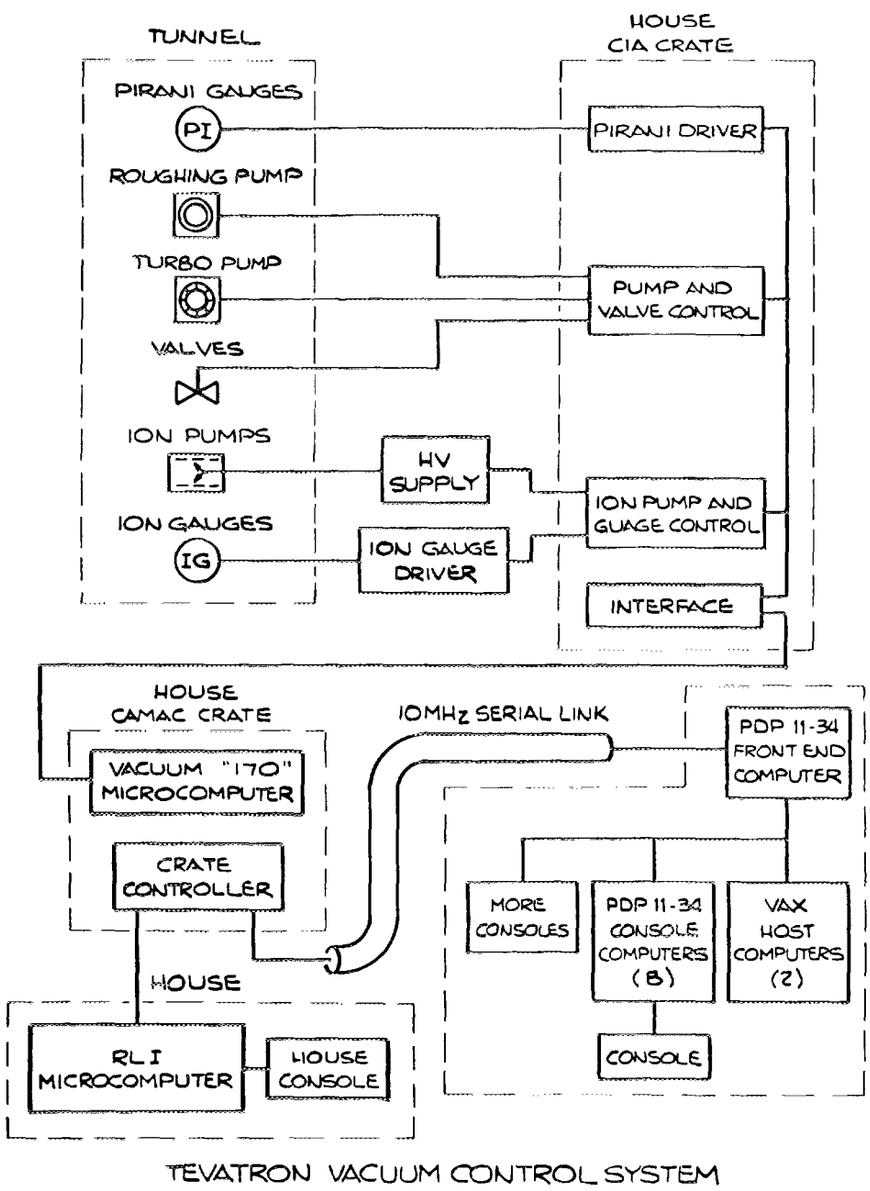


FIG. 3. Control system block diagram.

block diagram of the control system, described in detail elsewhere.[8,9]

The CIA crate (control interface adaptor) contains all the driver cards for gauges, valves, and pumps. It also contains hardward interlocks such as differential pressure interlocks against valve opening, pump isolation in case of failure, and beam valve interlocks. All essential interlocks are implemented in TTL hardware and provide no overrides to either humans or computers. The system can therefore continue to operate safely even when the computer is not available. Driver cards exist for a variety of functions:

(1) The Pirani card—This card contains all the circuitry to operate six Pirani gauges. We use "Convectron" gauge heads[10] for their all glass and metal construction, wide range, and good zero point stability. These gauges are also used to turn cold cathode gauges on and off, and to interlock valves and start the turbopumps.

(2) The pump and valve card—Acting on pressure readings by Pirani gauges and on current sensors in the pump power lines, this card operates a pump station and two gate valves under computer control.

(3) The cold cathode gauge card—This card interfaces to a chassis containing 12 independent high voltage power supplies with built-in logarithmic current-to-voltage converters, covering a pressure range from below $10^{-7}$ Torr to about $10^{-3}$ Torr. This card will deactivate any cold cathode gauge within 10 s after turn-on if its pressure reading exceeds $2\times10^{-5}$ Torr, in order to prevent carbon deposition in the gauge heads. The "170" microcomputer activates the gauges once very 5 min and stores the newest value until the next reading is taken. The gauge heads are made from stainless steel with a ceramic "SHV"-type high voltage connector feedthrough, without any organic seals. They can be cleaned by bead blasting through the flange.

(3) The ion pump/ion gauge card—Ion pumps are driven by individual high voltage power supplies containing logarithmic current-to-voltage readout converters, computer controls, and a timer which turns the supply off if the pressure is not below $2\times10^{-6}$ Torr after 15 min of operation. The ion gauges operate at an emission current of 100 $\mu$A pressures above $10^{-7}$ Torr and at 10 mA below. Their logarithmic output voltage corrects automatically for the range. Electron bombardment "degas" can be remotely activated for 1 min at a time. The driver card for ion pumps and gauges contains interlock circuits for beam valves, such that at least two out of four devices must be "on" and reading low pressure for the beam valve to stay open. This redundancy guards against accidental valve closings due to current spikes in ion pumps, and burned out filaments in ion gauges.

The CIA crate can be filled with any number and combination of the different driver card types. The interface card addresses each driver in turn to request information or exert control as required. Hardware interlocks are implemented by adapting the back plane wiring to the task at hand. We have found this system to be flexible, reliable, compact, and inexpensive.

The CAMAC 170 microcomputer is used to read data from the CIA crate and to mediate its communication with the host computer system. It checks vacuum data continuously and raises alarms if they are out of tolerance. This microcomputer also executes control sequences such as pumpdown and the starting of ion pumps. A local microcomputer (RLI) and console is able to read and display status and values, since there are no front panel displays.

The host computer (VAX system) is operated through a number of PDP 11-34 minicomputers, each of which may run any of a large number of applications program, providing such things as ring-wide pressure displays, alarm messages, and data logging.

## III. INSTALLATION AND LEAK HUNTING

By far the most time consuming aspect of the Tevatron installation is leak hunting. In the completed machine there are 1282 cryogenic interfaces. Each interface, shown in Fig. 4, consists of a beam tube seal, two liquid helium connections, one liquid nitrogen connection, and a room temperature insulating vacuum seal. Each of the cryogenic seals must be able to be verified at room temperature with sufficient sensitivity to assure that it will not leak liquid helium. We will describe the techniques developed over the past five years to accomplish this.

Each device during its manufacture is leak checked following every major assembly and welding procedure. Subassemblies are leak checked before installation. Any detectable leaks, with a required helium leak detector sensitivity of better than $2\times10^{-10}$ atm-cm$^3$/s are repaired at the time they are detected. Furthermore, all of the devices are cooled to at least liquid nitrogen temperatures and leak-checked again. Every magnetic element is tested at liquid helium temperatures when the magnet is excited for field measurement. Because of these stringent quality control measures less than 5% of the devices installed in the accelerator have leaks within the body of the device. Most of those leaks occur in damaged bellows and can be repaired without requiring disassembly of the device.

The installation and leak hunting when the elements are installed in the ring is done in a two-step procedure. Four dipoles, each 6.4 m long, and a quadrupole 2.3 m long, comprising a lattice half-cell, are installed and aligned in their proper location (see Fig. 1). Spool pieces are left out, leaving a gap between half-cells. The ends of the half-cell are closed off with a stainless steel end cap and each of the cryogenic circuits is connected and brought through the end cap with vacuum feedthroughs. That allows us to have access to each of the cryogenic spaces independently for the purpose of pressurizing with helium gas.

All of the beam tube interfaces are connected using a rotatable bolt-on flange and a 9-cm-diam, lead-plated Inconel "C" seal.[11] A helium leak detector is used to pump down the beam tube through a $LN_2$ trap and each of the interfaces is bagged and flooded with helium. Approximately 20% of the beam tube seals leak on the first pass, almost always due to scratches on the sealing surface. Scratches are polished out with 600 grit abrasive, resealed, and tested again.

After the beam tube is certified, the two helium circuits and the nitrogen circuit are connected at each interface. The first helium circuit, called the single-phase circuit (because the liquid helium in that space is kept under sufficient pres-

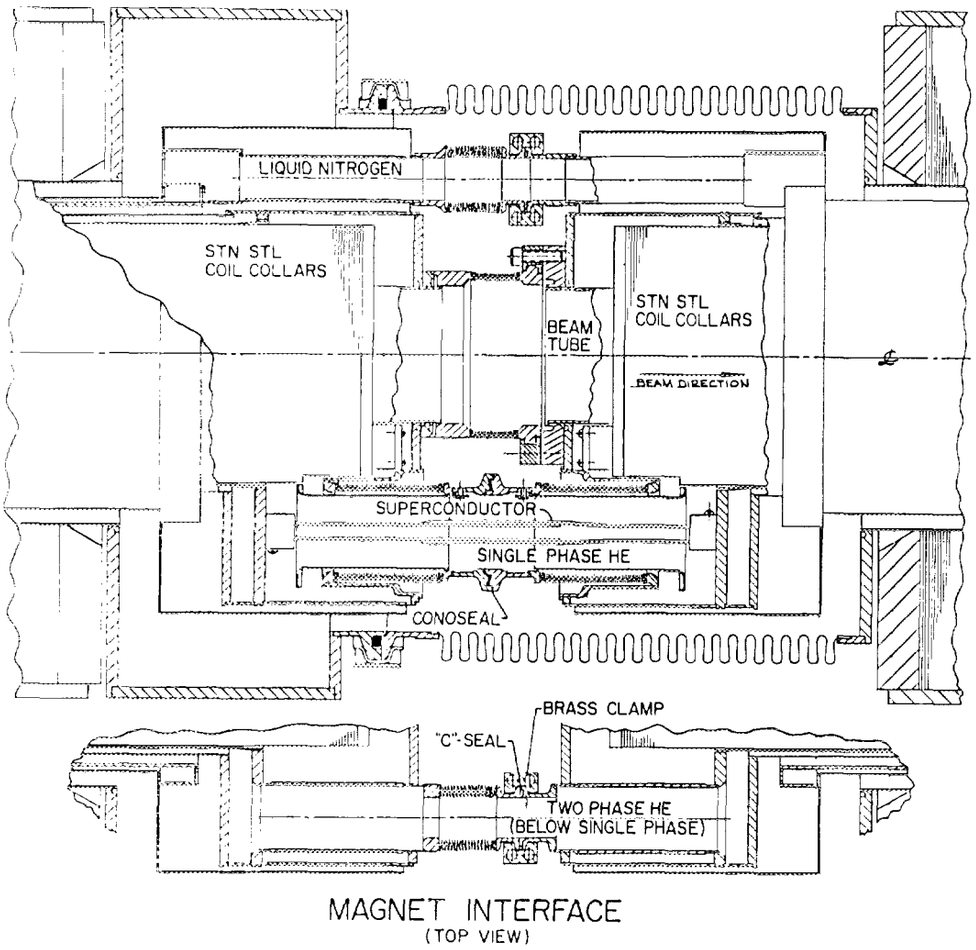


FIG. 4. Interface between two magnets.

sure so that it does not boil) also contains the magnet coils and the electrical leads. The leads are soldered together and insulated, and the joint is closed using a 5-cm-diam Conoseal[12] plated with 7.5 to 10.0 $\mu$m of silver. We have found that this silver plating is necessary and reduces the failure rate of the seals from 20% on the first try for unplated seals down to about 2% with the plating. We have also tried coating the seals with indium or plating with copper, but neither of these techniques have given results as good as those obtained with silver plating. The flanges are compressed together using brass clamps and four stainless steel bolts. Brass is used because its thermal coefficient of expansion is slightly more than the stainless steel flanges and because of its low coefficient of friction. Single bolt Marman-type clamps[12] are more expensive and more difficult to compress uniformly around the flange. Furthermore, they appear to stretch out of shape and, therefore, are not reusable. The two-phase helium circuit (so called because helium in this circuit, the return to the refrigerator, is allowed to boil, thereby removing heat from the system at constant temperature by taking advantage of its heat of vaporization) and the nitrogen circuits are then connected, using 3-cm-diam, lead-plated Inconel C seals. These are also compressed with brass clamps and stainless bolts. The outer 30-cm-diam bellows are then closed using ethylene–propylene O rings and a Marman clamp.

A pumpout port is supplied on each magnet, near the downstream interface of that magnet. A helium leak detector (all helium leak detectors are Dupont model 120B)[13] is put on each one of the four available interfaces and on the beam tube, and the cryostat is pumped down. The first pumpdown on a fresh cryostat typically takes 3 h to reach a pressure sufficiently low so that the roughing pumps can be valved off and the leak detector opened fully to the cryostat. Subsequent pumpdowns, if necessary, take less time if the cryostat is let up to atmosphere using dry nitrogen. When the leak detector is able to be put on its most sensitive scale, with sensitivity of at least $2\times10^{-10}$ atm-cm$^3$/s/division, leak hunting can proceed. All leak detector output signals are put on a multichannel chart recorded for permanent record and for comparison of responses to leaks.

After air leaks into the cryostat are found and repaired, each of the circuits, except the beam tube, is pressurized in turn to 2 atm of helium gas and held for 15 min. If a leak is detected, it can be located by using the time response and magnitude of the detector output on the chart recorder. The conductance of the cryostats is such that a pulse of helium gas takes about 3 s to travel the length of a dipole. This

difference can easily be seen on the charts. Leaks are always assumed to be due to improper installation of seals. The leaky seals are removed and, if necessary, flanges are polished before the seals are replaced. This procedure is repeated until the four interfaces and the two end caps are leak tight in each of the circuits. The beam tube must also not show any helium when the single-phase space is pressurized. If one seal continues to leak after three replacements, a Viton O ring is used. Helium will diffuse through the O ring after a few minutes, but if the leak response is similar to the one when using the metal seals, the magnet is removed, and checked independently. If it still shows a leak, it is replaced.

This procedure is repeated for each of the eight or nine half-cells in a quarter sector. When that process is complete the spool pieces are installed, except for the one in the middle of the quarter sector. The procedure is similar to the one above. One-half of each quarter sector is checked with one helium leak detector on each half-cell. Since there is a vacuum barrier at each spool piece, the insulating vacuum of each 30 m section is independent, so there is no confusion as to which interface on a spool piece has a leak, since the interfaces are in different half-cells. If a leak is found, more leak detectors are then used to locate it. The vacuum barrier also allows one half-cell to be opened for repair while maintaining vacuum in all of the others.

After each half of the quarter sector is certified, the last spool piece is installed and leak-checked. The complete process is very time consuming. On the average it takes only one-half hour to physically place a magnet, one hour to align it, and four man-hours to complete an interface. However, it takes a total of 40 to 50 man-hours to install and leak check each one, roughly equally split between the half-cell procedure, before the spool pieces are inserted, and the final leak check with the spool pieces in place.

The statistics of seal replacement for the half-cell leak check of one-half of a sector are shown in Table I. This table shows the number of seals of each type that had to be replaced one, two, three, or four times. Four attempts were made at sealing one of the single-phase leaks before it was decided that the magnet itself had a leak. The magnet was sent back to the production area to be repaired. It was the only magnet out of 78 in that half-sector that had to be replaced, showing the excellence of the quality control during production.

The final leak checking procedure shows a similar pattern with most of the leaks occurring in the two-phase and nitrogen seals. In this second phase of leak hunting, essentially no leaks show up in the areas that were certified during the half-cell procedure.

## IV. OPERATIONAL EXPERIENCE

The purpose of the A-Sector test of the Tevatron was to operate a sufficiently large segment of the final accelerator to give guidance in the design and operation of the vacuum, cryogenics, power supply, and magnet protection systems of the complete machine. One-eighth of the accelerator, consisting of 152 cryogenic components, three satellite refrigerators, and the large central helium liquefier, spread over 750 m in the main ring tunnel, was assembled, leak checked, and maintained at cryogenic temperatures for most of a five month period.

Before cooldown the cryostats were pumped by the turbomolecular pump stations to pressures between $10\times10^{-3}$ and $40\times10^{-3}$ Torr. The beam tube was pumped using portable turbomolecular pump carts through liquid nitrogen traps. The ion pumps and gauges were baked to 150 °C for 48 h and then started, after which the portable pumps were removed from the system. The pressure in the beam tube, read at the ion pumps, was between $10^{-6}$ and $10^{-7}$ Torr before cooldown.

Once cooldown is started the pressure in the cryostat decreased slowly until the temperature approached 70 K. Figure 5 shows a pressure profile versus temperature in A-Sector during a typical cooldown for all locations except those next to a pump station. Once the temperature at a particular location reaches the condensation temperature of the major components of air, the pressure drops rapidly by three to four orders of magnitude. The effective pumping speed through the magnet string is very small and the pressure is dominated by the cryopumping effect of the helium cryostat. As the temperature continues to drop from 50 to 4.6 K (the operating point of the system) the pressure drops another one to two orders of magnitude. The pressure in the cryostat during operation is typically less than $10^{-7}$ Torr as an upper limit.

The beam tube pressure showed roughly the same behavior as the cryostat pressure, except two or three orders of magnitude lower in pressure, dropping to the $10^{-10}$ Torr range. Since that pressure is measured warm we assume that it is due to outgassing of the gauge and its enclosure and we believe that it is an upper limit.

TABLE I. Half-cell leak check.

| Circuit | Total interfaces | Number of seals replaced after test: First test | Second test | Third test | Fourth test | Comment |
|---|---|---|---|---|---|---|
| Beam tube | 64 | 12 | 4 | 0 | 0 | |
| Single phase | 64 | 3 | 1 | 1 | 1 | Magnet replaced |
| Two phase | 64 | 16 | 3 | 0 | 0 | |
| Nitrogen | 64 | 17 | 2 | 0 | 0 | |

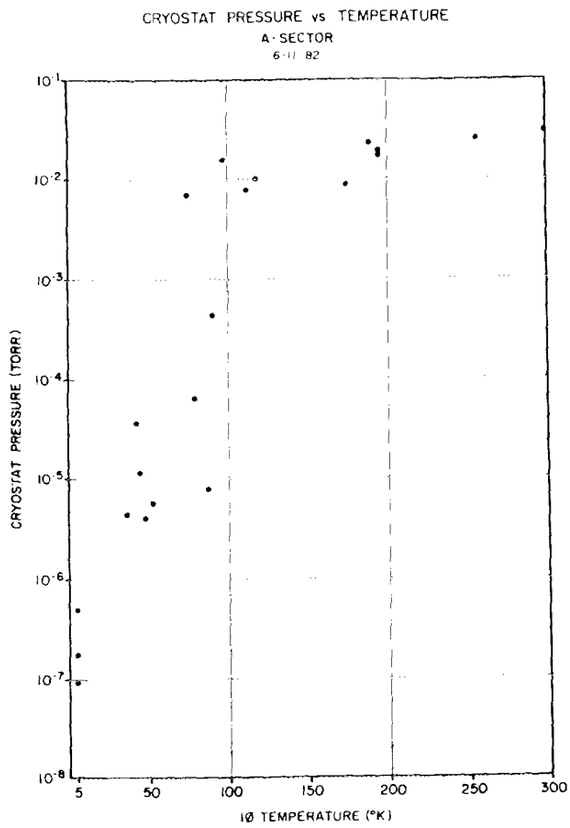


FIG. 5. Nitrogen equivalent pressure as a function of temperature at various locations in the A-Sector cryostat during a cooldown procedure.

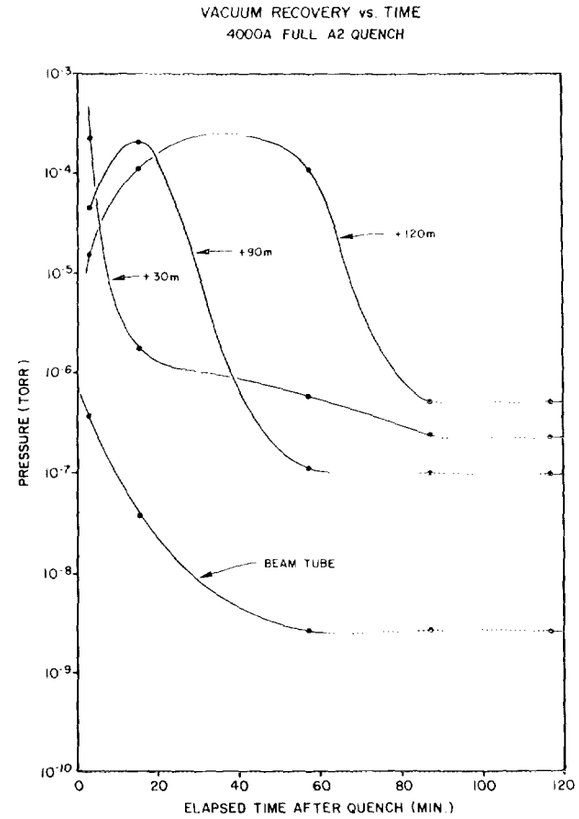


FIG. 6. Nitrogen equivalent pressure as a function of time after a full quarter-sector, 4000 A quench. The labels on the curves refer to the distance of the gauge from the cold helium feed point.

When the A-Sector test was started there was one known small internal leak in the liquid nitrogen system. In addition to that leak, at least three others showed up during the run. Two of those were either air leaks from outside the cryostat or internal nitrogen leaks, and one was a very small helium leak, much too small to be detected warm. In any case, they did not cause any problem during normal operation since they were cryopumped as expected on the cold surfaces. They were, however, troublesome whenever the cryostat was warmed (usually due to magnets "quenching"—that is, going into a normal state) since the accumulated cryopumped gas would evolve and create regions of high pressure. That increased the heat leak in those regions, releasing even more gas, putting an extra burden on the helium refrigerators, making it more difficult to cool down the system. The problem was solved by putting radiation-hardened portable pump carts near the leaks to get extra pumping during the warm periods.

Figure 6 shows the pressure at various points in the cryostat, and one place in the beam tube, as a function of time after a massive quench. In this particular quench a complete quarter-sector (250 m) was driven normal simultaneously at 4000 A, depositing 12 MJ of energy in the liquid helium. The distances shown are from the point where liquid helium enters the system. Far from the refrigerator the cryostat vacuum pressure continues to increase for a considerable time after the quench, whereas the pressure in the region close to the refrigerator starts to decrease almost immediately. It appears, in fact, that the vacuum is a fairly reliable measure of the progress of a cool-down procedure.

The whole of the A-Sector region was warmed to room temperature once during the test, due to a failure that burst an improperly installed internal bellows during a quench. In the year preceding the A-Sector test, one of the quarter-sectors had been installed and cooled twice to liquid helium temperature. All told, the number of helium seals times the number of thermal cycles was $N_{cycle} = 772$, including 54 cycled four times, 48 cycled three times, and 206 cycled twice. In addition to the above-mentioned small helium leak, one leak opened up in the single-phase during the warming cycle after the bellows were burst. This leak was in the region that was undergoing its first warming cycle. It was a very large leak that was easily found during the leak check before the least cooldown and was quickly repaired. No leaks appeared in those regions which were cycled more than twice to 4.6 K.

In summary, our experience was that the superconducting accelerator can operate with small nitrogen or air leaks and some number of very small helium leaks, and that the first thermal cycle may cause helium leaks in a few tenths of a percent of the seals. What is most encouraging is that even though there were some leaks that were not found in the warm state, or that opened up during thermal cycling, none

of them were large enough to prevent operation. Leaks that are large enough to cause problems can be detected during the warm leak check procedure. There is no evidence that multiple thermal cycling continues to cause leaks.

## ACKNOWLEDGMENTS

The authors would particularly like to thank the many Fermilab technicians who worked with amazing efficiency and intelligence in assembling and operating the Tevatron A-Sector test.

[a] Operated by Universities Research Association, Inc. under contract with the U.S. Department of Energy.

[1] D. Edwards, Jr. and P. J. Limon, J. Vac. Sci. Technol. **15**, 1186 (1978).
[2] S. Dushman, *Scientific Foundations of Vacuum Technique*, 2nd ed., edited by J. M. Lafferty (Wiley, New York, 1962), p. 570ff.
[3] E. Fisher and K. Zankel, CERN-ISR-VA/73-52, 1973.
[4] C. Benvenuti, R. Calder, and N. Hilleret, IEEE Trans. Nucl. Sci. **NS-24**, 3, 1227 (1977).
[5] S. K. Erents and G. M. McCracken, J. Appl. Phys. **44**, 3139 (1973).
[6] C. Benvenuti and M. Hilleret, CERN-ISR-VA/79-12, 1979.
[7] Ethylene–propylene–compound 560ND, Minnesota Rubber Co., Minneapolis, Minnesota.
[8] L. Bartelson and H. Jöstlein, IEEE Trans. Nucl. Sci. **NS-28**, 3, 33227 (1981).
[9] J. R. Zagel and L. J. Chapman, IEEE Trans. Nucl. Sci. **NS-28**, 3, 2305 (1981).
[10] Granville–Phillips Co., Boulder, Colorado.
[11] Advanced Products Co., North Haven, Connecticut; Pressure Science Inc., Beltsville, Maryland.
[12] Aeroquip Corp., Marman Div., Los Angeles, California.
[13] Dupont Instrument Corp., Wilmington, Delaware 19898.