FERMILAB TEVATRON TRANSFER LINE

C. Rode, R. Ferry, M. Leininger, J. Makara, D. Richied &
J. Theilacker/and S. Stoy

Fermi National Accelerator Laboratory*Batavia,IL 60510
Cryogenic Consultants, Inc., Allentown, PA 18103

INTRODUCTION

The Tevatron transfer line consists of twenty-five 250 meter sections interconnected with vacuum jacketed U-tubes forming a loop. Each section contains a 4.50 cm i.d. supercritical He line and a subcooled liquid N_2 shield with an expansion joint in the middle of the run.

CONCEPT

The Tevatron refrigeration system is based on the concept of a Central Helium Liquefier, CHL, (5000 ℓ/hr) providing liquid to 24 "satellite refrigerators" operating as amplifiers with a flow gain of 12 producing 966 W per unit.[1,2] Both from the standpoint of system reliability and also ease of installation, debug and startup, it was decided to build a complete transfer line loop starting at the CHL and returning to it. This loop consists of 25 independent sections, each interconnected to the next by a pair of vacuum jacketed U-tubes with a branch tap to the local refrigerator. This system permits the loss of any one section and still maintains all 24 refrigerators operating by feeding a portion of the loop in reverse.

CROSS SECTION

Figure 1 gives the cross section of the line. The line is made of commercial 304 stainless steel schedule 5 & 10 pipe with G-10 supports. The inner pipe has an i.d. of 4.50 cm and contains supercritical He at 4.6 to 5.5°K and 3 atm. This pipe is wrapped with 15 layers of superinsulation (aluminized Mylar and Dexter paper). A G-10 support is located every three meters.

---

*Operated by Universities Research Assoc., Inc., under contract with the U.S. Department of Energy.

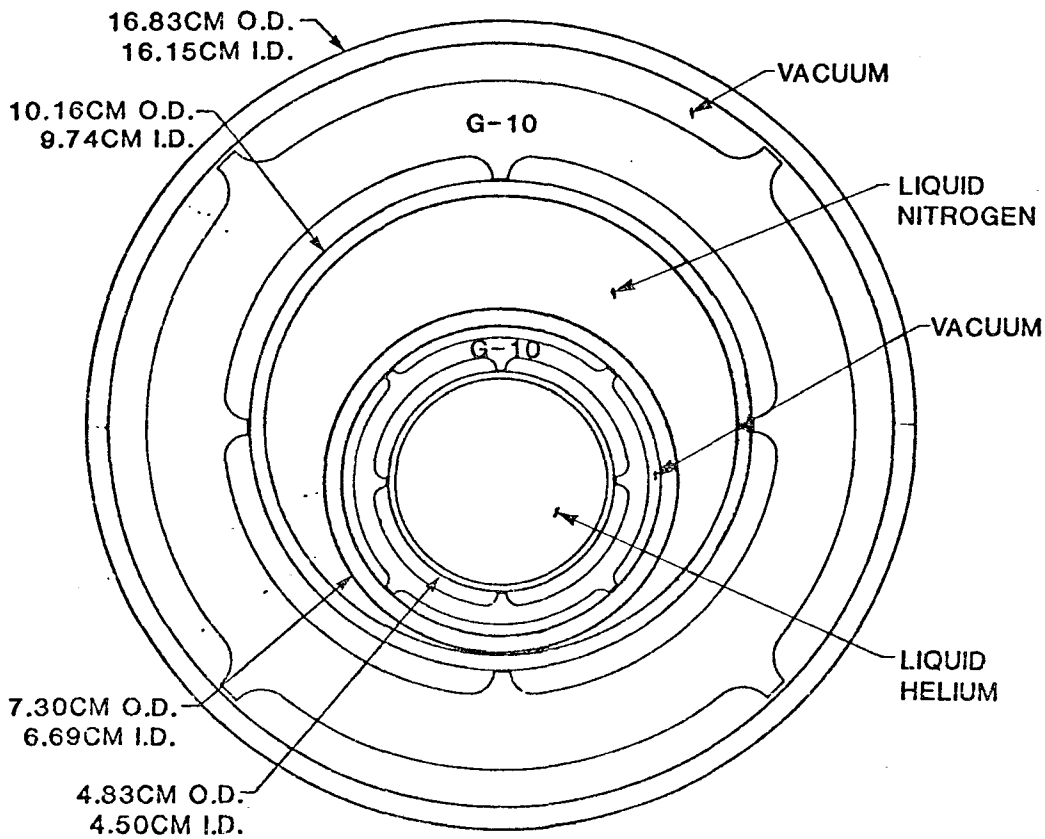

Figure 1. Transfer Line Cross-Section

The second and third pipes, 7.30 cm o.d. and 9.74 cm i.d., form the shield for the transfer line as well as the liquid N_2 supply for the refrigerators and magnets. The shield operates at 3 atm subcooled liquid with the last two sections breaking into the 2-phase region. The flow area of the shield is 32.60 cm.^{2} The third pipe is wrapped with 60 layers of superinsulation with G-10 suspensions again located every three meters. The fourth pipe, 16.83 cm o.d., is the outer vacuum jacket.

EXPANSION AND BAYONET CANS

The schematic of one section of the line is given in Figure 2. At each end is located a bayonet can, a 45.72 cm diameter vertical pipe, which contains a He and a N_2 female bayonet for interconnecting to the next section as well as to the local refrigerator. At the bottom of each of the bayonets is a labyrinth seal which prevents thermo-acoustic oscillations in the bayonets. At the top of each of the bayonets is located a room temperature ball valve, a chevron seal, and an o-ring flange. The male bayonet inserts through both

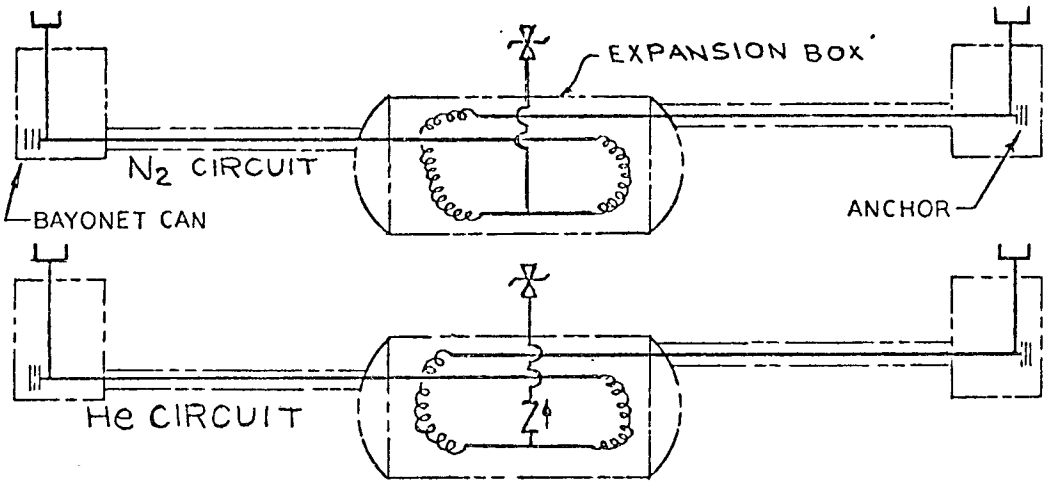

Figure 2. One Section Tevetron Feed Line(1/25 Ring)

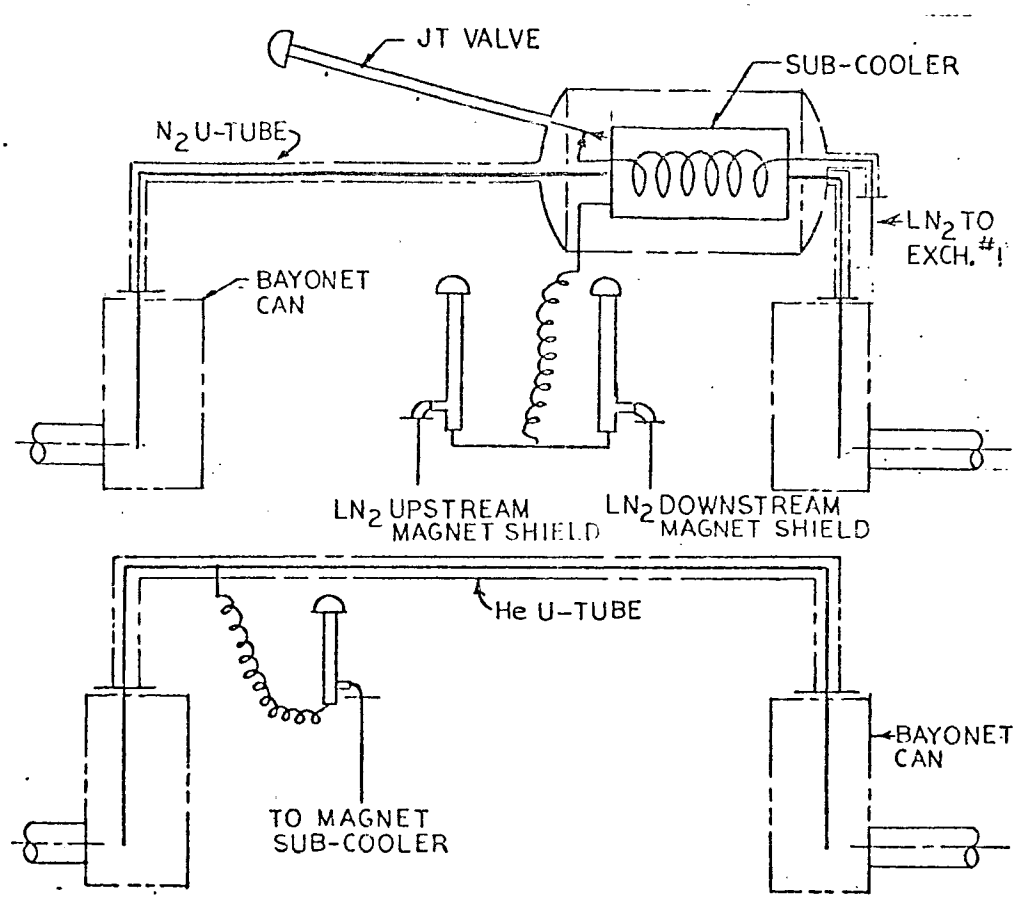

Figure 3. One Pair Tevetron U-Tubes

the ball valve and the chevron and makes a leak-tight seal on the o-ring.

U-TUBES

Completing the cryogenic transfer line system are 24 helium and nitrogen U-tubes, Figure 3. They connect the various sections of the transfer line and provide branch taps to the refrigerator and magnet systems. Each U-tube has a vapor pressure thermometer which can be read locally.

The helium U-tube consists of a 4.5 cm i.d., 1.83 m-long span pipe insulated with 100 layers of superinsulation and a vacuum jacket. A 1.22 m vertical bayonet at each end with an i.d. of 3.0 cm is inserted into the bayonet can discussed earlier. A vacuum jacketed flexible branch line with flow control valve joins the U-tube to the satellite refrigerator.

The nitrogen U-tube is much more complex in that it contains a subcooler heat exchanger which removes the shield heat leak of the previous 250 m transfer line section. The subcooler is made from a 3 m-long, 1.09 cm i.d., 2.54 cm o.d. copper finned tube wound on a 7.6 cm diameter mandrel in the horizontal position. The span pipe is again 4.5 cm i.d. while the bayonets are .91 m long with an i.d. of 3.31 cm. The internals are insulated with 40 layers of superinsulation and a vacuum jacket.

The main transfer line flow of subcooled LN_2 passes thru the shell side of the subcooler. LN_2 (or 2-phase) is extracted at the top of the exchanger shell and is passed through a Joule-Thomson valve reducing the pressure to near 1 atm, thus decreasing its temperature to its boiling point at that pressure. This 2-phase mixture passes through the tube side of the finned tubing, exchanging its latent heat to subcool the 3 atm shell side nitrogen. The 2-phase nitrogen is finally transported to the #1 heat exchanger of the cold box, providing the first stage cooling of high pressure helium. Some LN_2 is extracted at the bottom of the exchanger to provide magnet shield cooling; it flows through a vacuum insulated flexible line with two control valves. The remaining LN_2 passes to the next bayonet can and in turn will provide shield cooling of the next transfer line section.

The transfer line itself has no isolation valves in the system. Any isolation required will be done by lifting the U-tubes until the bottom of the male bayonet clears the warm ball valve; the chevron seals will prevent a large leakage flow. The ball valves are then closed and the U-tube removed.

FABRICATION

24.4 m lengths of the transfer line were fabricated at a specially designed facility. Fabrication was performed on four subassembly lines, each of which produced one of the four pipe sizes. Almost all of the pipe was seam weld pipe in 12.2 m lengths.

The first subassembly line fabricated the He pipe. Two 12.19 lengths of the 4.5 cm inner pipe were welded, cold shocked with liquid nitrogen three times and then leak tested. Preformed cylinders with 15 layers of multilayer superinsulation, and the G-10 spacers were then slid over the pipe. The G-10 spacers were anchored by a 1.3 cm-wide band on each side.

A second subassembly line was used to weld the two pieces of 7.30 cm inner liquid nitrogen shield pipe, it was followed by cold shocking and leak testing. The two pieces of 9.74 cm outer liquid nitrogen shield pipe were welded on the third station. The subassembly was then cold shocked and leak tested, followed by installation of preformed cylinders with 60 layers of insulation and the G-10 support rings.

The fourth and final assembly station was used to weld the 16.83 cm outer vacuum shell, which was then leak tested. This assembly station was constructed so that it could be moved to a position that would permit each of the subassemblies to telescope into it on a specially designed roller system. The completed 9.74 cm subassembly was first telescoped into the vacuum jacket, followed by the 7.30 cm and 4.5 cm pipes. The completed lengths were then transported to seven predetermined locations around the accelerator ring.

Two other assembly lines are being used to fabricate the expansion boxes and the bayonet cans for the line terminations. At the time of the conference 14 of the 25 expansion boxes were complete and 11 pairs of the 25 pairs of bayonet cans were complete. Two additional assembly lines have recently been started for the He and N_2 U-tube production.

INSTALLATION

Prior to installation of the subassemblies around the 6250 m ring, supports for the transfer line, expansion boxes and bayonet cans were installed and surveyed level. Installation of the transfer line sections and the expansion boxes was carried out with a helicopter; 203 assemblies were precisely positioned around the ring from seven staging areas in 16 hours. The bayonet cans are installed in the refrigerator buildings and anchored firmly to the floor. Alignment is critical since the helium and nitrogen U-tubes are

PLENUM PUBLISHING CORPORATION
227 West 17th Street
New York, N.Y. 10011

6 1/2 x 9 7/8

EVEN RUNNING HEAD ODD

rigid with no bellows.

Welding of the subassemblies in the field begins with the inner line starting at the bayonet can and ending at the expansion box. The other lines are moved as required and the bellows in the outer vacuum jacket at the bayonet cans are compressed to provide access to the inner pipe weld area. The finished line is cold shocked and leak tested. Similarly, the two liquid nitrogen shield lines are welded, cold shocked, and leak tested in sequence. Finally, the vacuum jacket line is welded by extending the bellows. The inner lines are then pressurized to 5 atm of He and a final leak test is conducted on the total system.

COOLDOWN AND WARMUP

The startup sequence of the transfer line begins with the decontamination of the flow passages. Water vapor is purged from both the helium and nitrogen passages, using a nitrogen gas purge. Our experience has shown that flow purging to less than 10 ppm water vapor is adequate for limiting ice plugs in the refrigerator heat exchanger. The helium passage is then helium flow purged to less than 50 ppm nitrogen.

At the beginning of the transfer line cooldown sequence, the insulating vacuum is typically on the order of 300 microns. During cooldown, the line is cryopumped to its nominal operating vacuum of less than 10^{-7} Torr. The line will cryopump as long as the residual gases are nitrogen or water vapor and not helium used for leak checking during the construction phase. The line has no permanently installed vacuum pumps or vacuum readouts.

Cooldown procedures for the transfer line were developed to minimize surging, which could result in violent pressure spikes. The circuits are first pressurized with warm gas to the nominal operating pressure of 3 atm. Liquid nitrogen and supercritical He, at 3 atm are then valved into the circuit and the flow is controlled at the outlet of the transfer line. Normal cooldown after the ring is complete will involve only one section, with both adjacent sections cold and operating. Either end is connected to the operating system and the other is tied into the low pressure He and N_2 headers. When the new section is cold and "full" the connections to headers are removed, the normal U-tubes are installed, and full loop flow resumed.

To warm up a section the two U-tubes at both ends are removed and special L-tubes connect the refrigerator to the adjacent sections. The return leg of the transfer line is then fed backwards from the CHL, leaving the refrigerators unaffected. The removed section is then warmed up by cross-connecting it to the warm

PLENUM PUBLISHING CORPORATION
227 West 17th Street
New York, N.Y. 10011

6 1/2 x 9 7/8

refrigerator building piping.

OPERATION AND HEAT LEAK MEASUREMENTS

There have been three transfer line runs; the first one on a 274 m section between A-1 and A-2 in May thru July '80 (Figure 4). The shield heat leak was measured, using the temperature rise in subcooled LN_2 as it traveled between buildings. The helium heat load was measured with 9 to 10°K gas; a measurement using supercritical helium was attempted but failed due to severe flow oscillations. The respective heat loads were 165.W and less than 11.W. The line was then used to cool two 125 meter strings of magnets. The A-1 refrigerator was run as a liquefier to simulate the CHL, the transfer line shipped supercritical He, and the A-2 refrigerator operated as satellite, cooling the magnets. The second run was a short heat leak run in Dec. '80. The respective heat loads were 140.±20W (.51 W/m) and 9.±1. W (.033 W/m).

The third run started in July '81: it consists of four sections of line for a total length of 975 m. Subcooled LN_2 is shipped in both directions from the CHL. The A-1 refrigerator is again simulating the CHL, shipping supercritical He from A-1 to A-4 compressor suction through A-2, A-3, and the CHL, respectively. We are currently trying to understand and control flow instabilities in both the He and N_2 circuits so that we can proceed with a detailed set of heat leak measurements. Preliminary results indicate that heat loads are similar to previous measurements.

REFERENCES

1. C.H. Rode, "ADVANCES IN CRYOGENIC ENGINEERING", Vol. 25, Plenum Press, New York, Paper ID5 (1980).

2. C.H.Rode, Fermilab Tevatron Five Refrigerator System Tests, Paper G-24, this Conference.

3. J. Theilacker, IEEE Trans. Nucl. Sci., Volume NS-28, No. 3 3257 (1981).

6-1/2 x 9-7/8 in. trim
Elite typewriter
33-1/2 x 50 picas working size

PLENUM PUBLISHING CORPORATION
[illegible] West 17th Street
New York, N.Y. 10011

6 1/2 x 9 7/8

EVEN RUNNING HEAD ODD

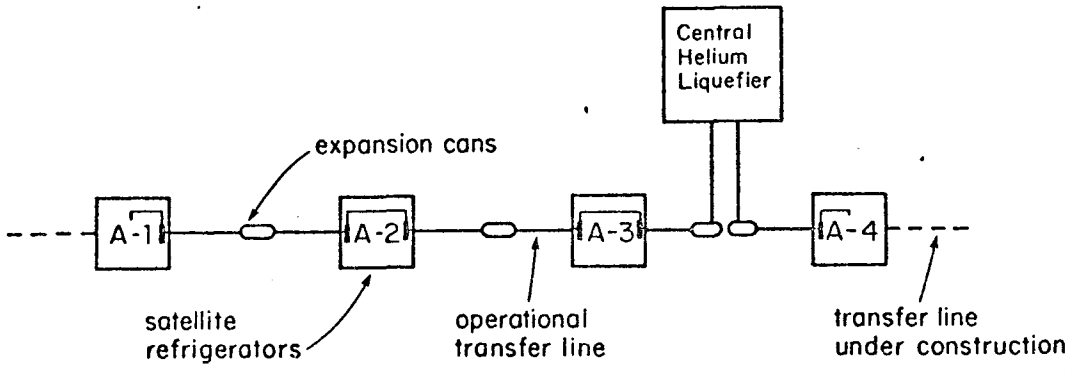

Figure 4. Transfer Line Test Layout

AUTHORS' AFFILIATION

AND ADDRESS

[illegible]

[illegible] x 9-7/8 [illegible]
[illegible] typewriter
[illegible]
[illegible] x [illegible] pieces working size