PUB-79-115-E
E-243

Submitted to Physics Letters.

Direct observation of a pair decay of neutral charmed particles produced in a 400 GeV/c proton interaction.

H.Fuchi, K.Hoshino, S.Kuramata, K.Niu, K.Niwa
H.Shibuya, S.Tasaka and Y.Yanagisawa

Department of Physics, Nagoya University
Chikusa-ku, Nagoya, Japan

N.Ushida

Faculty of Education, Aichi University of Education
Kariya, Aichi, Japan

Y.Maeda and H.Kimura

Faculty of Education, Yokohama National University
Hodogaya-ku, Yokohama, Japan

The second evidence of a pair decay of charmed particles has been obtained in an emulsion chamber exposed to 400 GeV/c protons. The life time and production cross-section of charmed particles have been evaluated as several times 10^{-13} sec and several tens of micro-barn.

Several years in advance of the commencement of the study of charmed particles at accelerator energies, one cosmic ray event of 10 TeV range showing a pair creation of short-lived particles with life time around 10^{-13} sec and mass of 2 ∿ 3 GeV had been discovered in 1971 by a Japanese emulsion group[1]. Immediately after that, the particle was pointed out to be a possible charmed particle by a Japanese theoretical group[2].

According to the pioneering work, the search of such particles has been extended to the accelerator region utilizing emulsion chambers similar to the ones exposed to cosmic rays. Observation of a pair production of charmed particles in interactions induced by accelerated hadrons has not, however, been reported till quite recently.

Successively to the first report[3], this paper describes the second observation of the production and decay of a pair of neutral charmed particles in an emulsion chamber exposed to 400 GeV/c protons at Fermilab (E-243).

Emulsion chamber is not a pure emulsion stack, but a complex detector consisting of a target part and an analyser part[4][5]. It is exposed perpendicularly to the beam as is shown in Fig. 1.

The target part consists of 350 μm thick lucite sheets which have been coated on both sides by 50 μm thick emulsion. Such type of composite emulsion sheet is used as a two-fold emulsion counter to detect positions of interaction vertices and charged particles. Spatial resolving power of emulsion counter is extremely high and of the order of submicron. Thirty-four layers of emulsion counters are stacked to form a target with thickness of 1.7 cm.

The analyser part consists of 80 repetitions of a tungsten plate of 300 μm thick and an emulsion counter with polystyrene backing of 150 μm thick. A track of charged particle or a group of cascade electrons could be observed at each 0.1 radiation length along the shower axis. High accuracy of assembling the chamber enables us to trace very easily even a single minimum ionization track to the down-stream end of the chamber.

Electrons are clearly discriminated from other charged particles by inspecting cascade showers induced by them in the analysing part. By the same method, γ rays are also detected in this part. Energy of an electron or a γ ray could be estimated analysing individual cascade shower it induced. Momentum of a charged particle is estimated by means of relative scattering method. High precision in measurement of the relative distances of secondary particles to that of beams with known momentum, and high scattering signal due to tungsten allow us to extend the applicability of the method up to TeV/c region[4)5)].

To study short-lived particle production, this type of emulsion chamber was irradiated by a 400 GeV/c proton beam at Fermilab, keeping integrated exposure to be 3×10^3 protons/cm^2.

In the present study, analysis has been made on 317 proton interactions found by both area scanning and follow back of cascade shower methods. All of them have been carefully scrutinized for associated kinks, vees and other correlated phenomena within a forward cylindrical volume with radius of 100 μm and length of 3 mm or 6 mm.

One kink with deflection to emission angle ratio larger than unity, 8 charged and 1 neutral secondary interactions, 1 single vee and one pair of vees have been detected following down 3923 charged

secondary particles with total track length of 8.69 m. Obtained numbers of secondary phenomena are not inconsistent with those expected, except the one pair of vees as is shown in Table I.

Table I. Secondary phenomena observed.

	elastic kink ($\theta'/\theta \gtrsim 1$)	charged inelastic	neutral inelastic	electron pair in < 3 mm	hadronic vee
observed	1	8	1	29	1 single (K^0_s) 1 pair
expected	1	11.7	1	39.5	0.3 (K^0_s, Λ)

The single hadronic vee in the event W-1-265 has been identified as an early decay of $K^0_s \rightarrow \pi^+ \pi^-$ by geometrical and momentum analyses. Invariant mass of the parent particle is estimated as $0.485 \pm {}^{0.057}_{0.038}$ GeV assuming pions for both daughters. It satisfies a coplanarity condition and also P_T balance. The probability observing such a decay in 317 events under our present analysing condition is estimated as about 0.3.

One pair of hadronic vees which could not be interpreted by conventional assumptions has been observed in one of the event. Event W-1-319 took place in the plastic base of the most up-stream emulsion counter No.114. Number of produced charged particles is 9. Following down those particles over 4 mm to down-stream, there appeared each two legs of two vees, m and n for V-I, a and b for V-II, in the sensitive layers of emulsion counters No.105 and No.106.

Super-imposed micro-photograph of 12 emulsion counters showing Z projection of the event is given in Fig. 2.

The vertex points of those vees have been estimated, by geometrical method, to be at 4700 ± 20 μm and 4250 ± 30 μm respectively from the original interaction. No other charged particle correlated to the two vertices is observed in upper and lower emulsion counters. Relative angles of neutral lines O·V-I and O·V-II to the beam direction are 1.70×10^{-2} rad and 2.95×10^{-2} rad respectively. Emitting angles of charged legs relative to each neutral line are $\theta_m = 2.49 \times 10^{-2}$, $\theta_n = 1.61 \times 10^{-2}$, $\theta_a = 1.43 \times 10^{-2}$ and $\theta_b = 1.18 \times 10^{-2}$ rad. Both vees don't satisfy coplanarity condition. As there is no sign of associated bremsstrahlung in the analysing part, none of 4 charged legs could be electrons.

Momenta of charged particles have been estimated by relative scattering method. Mean transverse momentum of 9 charged secondaries has been estimated to be normal as $\langle P_{Tch} \rangle = 0.31$ GeV/c. Momenta of 4 charged particles of the two vees are, $P_m = 20.6 \pm {}^{3.7}_{2.7}$, $P_n = 22.9 \pm {}^{4.3}_{3.1}$, $P_a = 38.4 \pm {}^{8.9}_{6.1}$ and $P_b = 17.0 \pm {}^{3.5}_{2.5}$ GeV/c.

Seven γ rays have been detected in the down-stream part of the event. Sketch of the Y-projection of the event is shown in Fig. 3. By means of geometrical analysis, four of them are found to come from the original interaction vertex, and two others from the V-I vertex. The rest one is attributed to an outside origin. Energies of all γ rays have been estimated by cascade shower analysis. Among 4 γ rays emitted from the original interaction, two are identified to be daughters of an η-meson ($M_{\gamma\gamma} = 0.509 \pm {}^{0.071}_{0.059}$ GeV) and the other two are of a π^0 ($M_{\gamma\gamma} = 0.115 \pm {}^{0.029}_{0.013}$ GeV).

Two γ rays from V-I are identified to be daughters of a π^0 ($M_{\gamma\gamma}$ = $0.139 \pm {}^{0.048}_{0.026}$ GeV) with momentum of $24.6 \pm {}^{9.3}_{4.0}$ GeV/c.

From the above analyses, integrated visible momentum of the event is evaluated to be $363.0 \pm {}^{61.9}_{29.2}$ GeV/c including V-I and V-II.

Before proceeding with the kinematic analysis of the event, it is necessary to consider the possible source of background. The transverse momentum inbalance of the observed particles at V-II vertex is as high as $0.537 \pm {}^{0.118}_{0.082}$ GeV/c. The V-I involves at least one missing neutral particle besides two hadrons and one π^0 with momentum inbalance of $0.243 \pm {}^{0.098}_{0.082}$ GeV/c. Hence interpretations in terms of the decays of any known strange particles emitted from the original interaction may be ruled out. The possibility of the decays of the strange particles from upstream of the chamber is estimated to be negligibly small. The other possibility that both vees are due to nuclear interactions of neutral secondary particles from the original interaction is estimated to be less than 10^{-3} under our condition. The possibility of the interactions of neutral particles from upstream is estimated to be much less than that.

Therefore, no other interpretation of the event in terms of a pair decays of new short-lived particles is plausible. Assuming several decay modes of charmed meson which involve the emission of one missing neutral particle, invariant mass of V-I and V-II reduce to that of charmed meson D^0, 1.863 GeV/c^2, for missing momentum of $1.2 \sim 37^*$ GeV/c and $4.3 \sim 37^*$GeV/c respectively.

---

* When a missing momentum is about 37 GeV/c, the total momentum reaches the incident momentum of 400 GeV/c.

For example, masses of two parent particles are illustrated in Fig. 4 as a function of missing momentum for the final states ($\pi^{\pm}\ \pi^{\mp}\ \pi^{0}\ K^{0}$ for V-I) and ($\pi^{\pm}\ \pi^{\mp}\ K^{0}$ for V-II). Possibility of the baryonic decay mode is also examined for both vees, but no solution is obtained. This analysis shows that the life times of the charmed mesons V-I and V-II are in the ranges $2.8 \sim 4.2 \times 10^{-13}$ sec and $2.9 \sim 4.4 \times 10^{-13}$ sec respectively. Table II gives a summary of the two vees.

The life time of neutral charmed particles observed in the present study is consistent with our previous result[3)5)6)7)] and also with that obtained in neutrino interactions[8)].

Including preceeding series of analysis[3)5)], up to now, two pairs of charmed particles and 3 single candidates have been detected in our sample of 1637 interactions induced by 400 GeV/c protons. All types of decay of short-lived particles including such as neutral to all neutrals could be detected by our method. The detection efficiency of short-lived particles in our observing volume is estimated to be about 70 % for life time of a few times 10^{-13} sec. Inclusive production cross-section of charmed particle pair in hadron interactions is evaluated as

$$\sigma\ (PP \rightarrow C\bar{C} + X) = \frac{2 \sim 5}{1637 \times 0.7} \times 33 \times 10^{3} = 60 \sim 140\ \mu b$$

Assuming linear dependence of the cross-section on A as observed in J/ψ production[9)], above value should be reduced to $20 \sim 50\ \mu b$. This is not inconsistent with that derived by non emulsion experiments[10)].

Table II. Summary of the Two vees.

	V-I	V-II
Flight length μm	4700 ± 20	4250 ± 30
Emitting angle rad	1.70×10^{-2}	2.95×10^{-2}
Daughter angle rad	m 2.49×10^{-2}	a 1.43×10^{-2}
	n 1.61×10^{-2}	b 1.18×10^{-2}
	π^0 9.55×10^{-3}	
Daughter momentum GeV/c	m $20.6 \pm {}^{3.7}_{2.7}$	a $38.4 \pm {}^{8.9}_{6.1}$
	n $22.9 \pm {}^{4.3}_{3.1}$	b $17.0 \pm {}^{3.5}_{2.5}$
	π^0 $24.6 \pm {}^{9.3}_{4.0}$	
Transverse momentum of missing neutral GeV/c	$0.234 \pm {}^{0.098}_{0.082}$	$0.537 \pm {}^{0.118}_{0.082}$
Possible decay mode	$\pi^\pm \pi^\mp \pi^0 K^0$	$\pi^\pm \pi^\mp K^0$
	$K^\mp \mu^\pm \pi^0 \nu_\mu$	$K^\pm \mu^\mp \nu_\mu$
	$\mu^\pm K^\mp \pi^0 \nu_\mu$	$\mu^\mp K^\pm \nu_\mu$
Mass GeV	1.863	1.863
	if $P_{K^0} = 11.0 \sim 37$ GeV/c	if $P_{K^0} = 9.2 \sim 27.9$ GeV/c
	$P_{\nu_\mu} = 1.4 \sim 37$	$P_{\nu_\mu} = 4.3 \sim 16.5$
	$P_{\nu_\mu} = 1.2 \sim 37$	$P_{\nu_\mu} = 5.2 \sim 37$
Momentum GeV/c	$69.3 \sim 105$	$59.7 \sim 92$
Transverse momentum GeV/c	$1.18 \sim 1.8$	$1.76 \sim 2.7$
Life time sec	$2.8 \sim 4.2 \times 10^{-13}$	$2.9 \sim 4.4 \times 10^{-13}$

We would like to thank the staffs of the Fermi National Accelerator Laboratory for the successful exposure of emulsions, and Prof. J.J.Lord, University of Washington, for offering processing facilities of emulsion films. We are also very grateful to the Fuji Film Company for providing with high quality nuclear emulsion.

References

1) K.Niu et al., Prog. Theor. Phys. 46 (1971) 1644.

2) T.Hayashi et al., Prog. Theor. Phys. 47 (1972) 280, and 1998.

3) N.Ushida et al., Lett. Nuovo Cimento 23 (1978) 577.

4) H.Fuchi et al., Report at Bartol Conf. (1978). to be published by American Institute of Physics.

H.Fuchi et al., Nuovo Cimento 45A (1978) 471.

5) H.Fuchi et al., To be published in Nuovo Cimento A.

6) K.Hoshino et al., Prog. Theor. Phys. 53 (1975) 1859.

7) K.Niu, invited paper at the XX Int. Conf. on High Energy Physics, Tokyo 1978, to be published.

K.Niu, Report at Bartol Conf. (1978) to be published by American Institute of Physics.

8) E.H.S.Burhop et al., Phys. Lett., 65B (1976) 299.

C.Angelini et al., Phys. Lett., 80B (1979) 428.

9) M.Binkley et al., Phys. Rev. Lett., 37 (1976) 571.

A.Bamberger et al., Nucl. Phys., B134 (1978) 1.

10) P.Alibran et al., Phys. Lett., 74B (1978) 134.

T.Hansl et al., Phys. Lett., 74B (1978) 139.

P.C.Bosetti et al., Phys. Lett., 74B (1978) 143.

A.G.Clark et al., Phys. Lett., 77B (1978) 339.

Figure captions.

Fig. 1 Design of the emulsion chamber utilized in the present analysis.

Fig. 2 Super imposed micro-photograph of 12 films showing Z projection of the forward part of the event W-1-319. Incident direction of protons is perpendicular to the film plane. Each secondary track gives only one spot on each film. B_1 and B_2 are spots due to non-interacting protons.

Fig. 3 Sketch of Y projection of the event W-1-319. γ-rays are seen in the analyser part.

Fig. 4 Invariant mass of V-I and V-II as a function of missing momentum.

V-I $\rightarrow \pi^{\pm} \pi^{\mp} \pi^{0} K^{0}$. V-II $\rightarrow \pi^{\pm} \pi^{\mp} K^{0}$.

Fig 1 H. Fuchi et al. (Direct observation of ---)

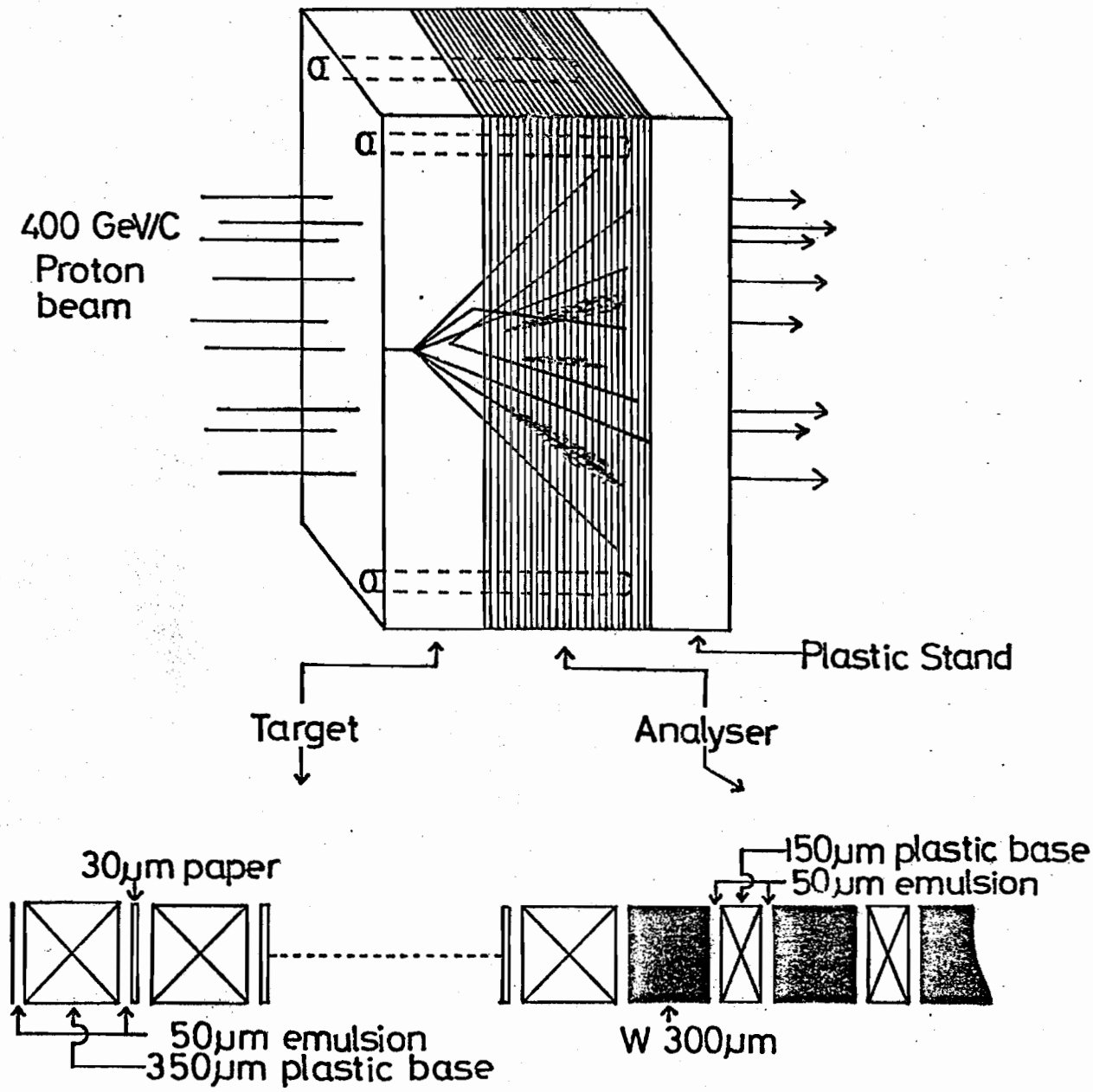

Fig. 2 H. Fuchi et al. (Direct observation of--)

Fig 3 H. Fuchi et al. (Direct observation of ---)

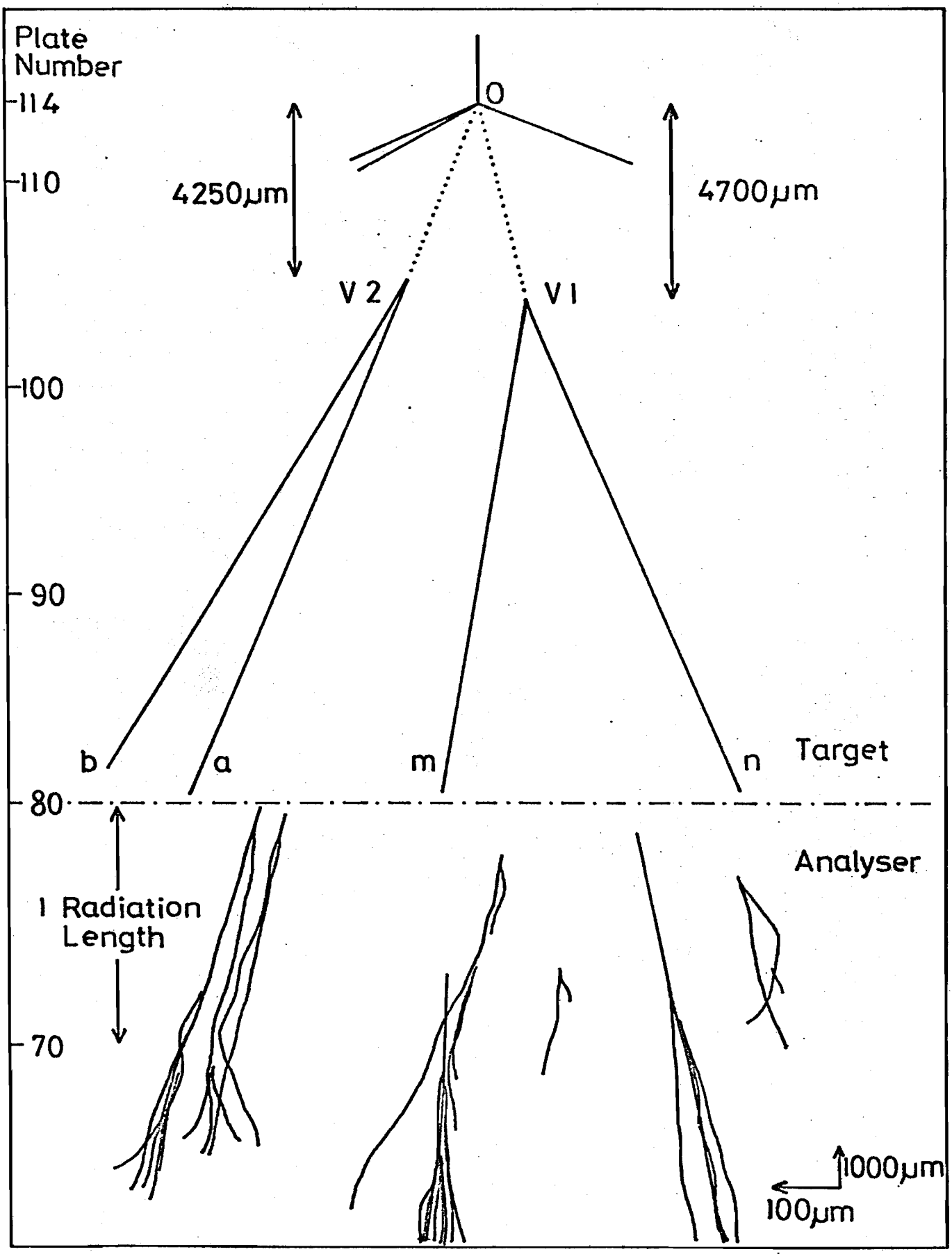
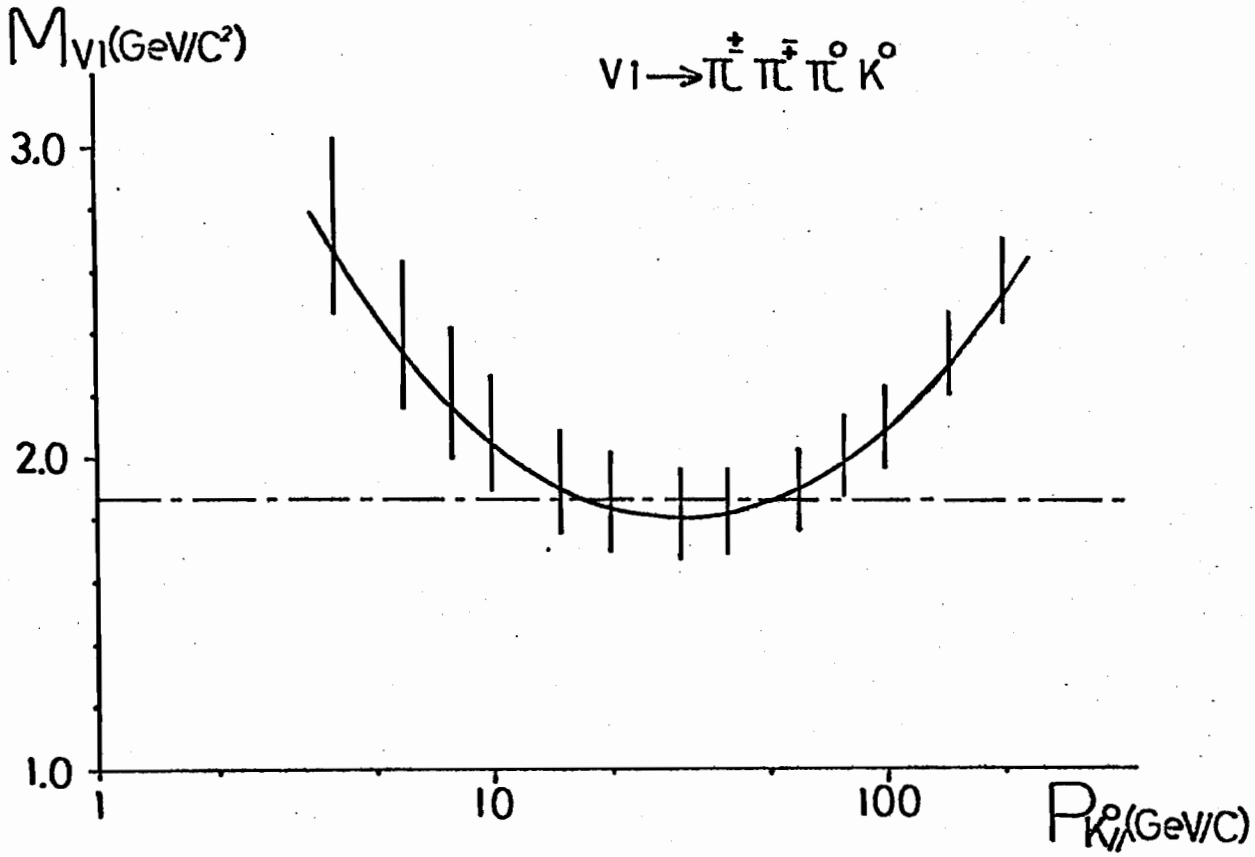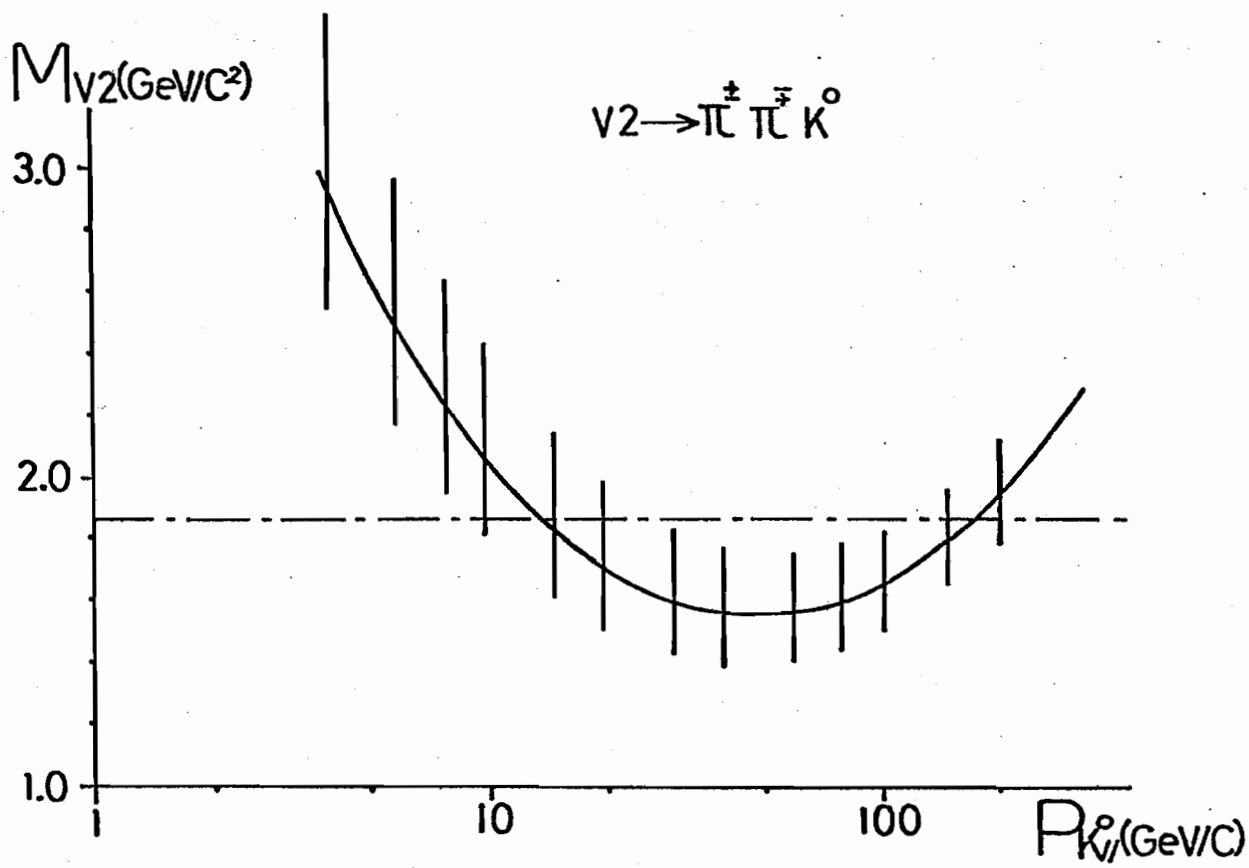
Fig.4 H. Fuchi et al. (Direct observation of τ ---)