Submitted to Nuclear Instruments and Methods

UPR-43E (Revised)
Univ. of Pennsylvania
July, 1978

E-395
FERMILAB-PUB-78-180-E

FLUORESCENT-WAVE-SHIFTERS AND SCINTILLATORS FOR CALORIMETERS

W. Selove, W. Kononenko, and B. Wilsker

Department of Physics
University of Pennsylvania
Philadelphia Pa. 19104

ABSTRACT: We have applied the fluorescent-converter technique to the design and construction of a segmented calorimeter. Design criteria are discussed, and detailed measurements are reported on various materials of possible use. BBQ-doped acrylic converter bars were developed for this work; a design using acrylic scintillator and BBQ converter bars gave very good uniformity of response.

RECEIVED
SEP 26 1978
DIRECTORS OFFICE
FERMILAB

1. Introduction.

Total absorption detectors, or "calorimeter" detectors, are widely employed in particle physics. One of the applications of such detectors is to the study of multiparticle events of high p_T (transverse momentum). Following the suggestion of Bjorken[1] that a calorimeter type detector would be attractive to use in such studies, and following the discovery of an unexpectedly large production cross-section for high-p_T hadrons in pp collisions at high energies [2,3,4], the necessary properties of a suitable calorimeter system to study multiparticle high p_T events were examined by Selove[5]. In that work it was concluded that a suitable calorimeter system must have energy resolution of a certain minimum quality, and should have (a) as high density as possible (for economic reasons), and (b) a high degree of segmenting in area. In a series of measurements by A. R. Erwin et al.[6,7] it was shown that the energy resolution and density requirements could be met by a sampling type steel-and-scintillator construction[8,9]; the remaining design feature to be satisfied was that of suitable segmenting.

An ideal type of segmenting for a multiparticle hadron calorimeter would be one which would have minimum dead space between adjacent lateral segments. Moreover, since the hadron calorimeter needed must typically have a total thickness of 5 to 8 absorption lengths, the signal collecting system should not introduce unduly large gaps in the depth direction.

One ingenious solution to the problem of making a highly segmented calorimeter with no large dead space or gaps has been developed by Willis[10]. He uses an ionization chamber mode of operation, with liquid argon, and plates of iron or other material. We have developed a segmented calorimeter using scintillator to provide the output signal rather than ion collection. While the ion collection system has a number of virtues, the scintillator system has the advantages of (1) a roughly 10- to 20-fold greater speed, (2) more readily providing a simple and flexible modular design, and (3) intrinsically greater freedom from problems introduced by electronic amplifier noise.

In order to make a sampling calorimeter array of segmented character without large dead space or gaps, a very compact light collection system is necessary. We have developed such a compact system, with modules which can be stacked in intimate proximity, using the fluorescence radiation converter

mechanism described in detail by Keil[11,12,13].

In Section 2 we give some general requirements on the segmented calorimeter. In Section 3 we describe the first such segmented calorimeter system built using this fluorescent bar technique; this system used liquid scintillator. In the subsequent sections we describe our studies of a number of different scintillator-fluorescent bar combinations, with the detailed properties which led us to the choice of BBQ-doped acrylic for waveshifter bars. We have built a large segmented calorimeter array using this material, and have used that array to study multiparticle high p_T events in hadron-hadron collisions[14,15].

2. General Requirements on the Segmented Calorimeter.

For the calorimeter system for which the present materials and design were developed, the following considerations were of major importance:

(1) Transverse dimensions of individual segments. Preliminary studies and existing information indicated that dimensions ranging from perhaps 15 cm x 15 cm to 30 cm x 30 cm would be needed.

(2) Uniformity of response. For use with steeply falling high-p_T event spectra, it is highly important to have response as uniform as possible over the area of the calorimeter.

(3) Sampling thicknesses, of metal and of scintillator. The choice of these thicknesses is dominated by considerations of energy resolution and of economy.

(4) Modular type of construction. This type of construction would have advantages of flexibility and of facilitating an arrangement in which successive depth layers could subtend roughly similar angular intervals at the target.

(5) Feasibility of close-stacking of individual modules, so as to reduce or effectively eliminate dead spaces.

Further information on items 1 and 3 is to be found in references 6, 7, 16, and 17. Considerations 2, 4, and 5 were all satisfied by a design we have developed, adopted from the fluorescent-bar technique described by Keil[12,13]. We studied the relevant properties of various possible scintillator and wave-shifter materials, including a number of materials specifically prepared for possible use

in such a detector. The final design and final choice of materials made possible the construction of a compact modular system satisfying all the major requirements outlined above. Details of these studies are given below.

3. Liquid Scintillator and MSB Bar.

We first constructed a fluorescent-bar-light-collection calorimeter module using liquid scintillator. After extensive tests on transparency, uniformity, and light collection efficiency[18], we arrived at a design using special liquid scintillator from which the normal wave-shifter was omitted[19], and using (bis-)MSB-doped-acrylic bar as the light collector material[20].

The design is illustrated schematically in Figure 1. Four segments, 30 cm x 30 cm each, were contained in a single liquid-tight box, of thickness typically about 90 cm and 3 absorption lengths long. Figure 1 shows the construction technique for two such segments, one above the other. The liquid-tight boxes could be stacked in very close proximity, in all three dimensions. The light collection system used thin strips of MSB bar, 10 mm x 3 mm in cross section, with the light piped to photomultipliers contained in a liquid-tight compartment inside the box. The MSB bars were contained in special liquid-tight UV-transmitting rectangular tubes, which extended from top to bottom of the box.

A set of several segmented modules was built, and was used in 1975 to test the uniformity of response, the energy resolution, the shower size, and the feasibility of measuring high-p_T events with such a system. The uniformity of this system was roughly $\pm$ 10% over the area of a segment, except for a severe hot spot found at the photomultiplier cathode[16]. Using trigger scintillators to avoid this hot spot, useful results were obtained on energy resolution and on shower size, and measurements of high-p_T cross sections showed that such a calorimeter, with hot spots avoided or removed, could be used successfully to measure high p_T events. The principal results on energy resolution, and on shower size and characteristics, are described in reference 16. This design, with liquid scintillator, constituted the first use of the fluorescent-bar technique to make a compact stackable scintillation calorimeter module.

Upon the completion of our work with this liquid scintillator system, we began the design of a much larger calorimeter array, for an experiment to study high p_T events. Our use of liquid scintillator had been primarily motivated by

economic considerations. It was clear that the mechanical design would be much simplified if one could use solid scintillator instead of liquid scintillator. At just that time we learned that a solid scintillator (acrylic) of very much reduced cost, and at the same time of excellent mechanical and aging properties, had just been developed by W. Kienzle and associates, working with Roehm GmbH of Darmstadt[21]. We thereupon undertook a detailed study of various scintillator and wave-shifter-bar materials, aimed at the design of a suitable calorimeter module using solid scintillator.

4. Choice of Materials.

4.1 General Principles

The waveshifter light collection technique for calorimeters has two major virtues:

(a) The light collection system can be made very compact, minimizing "dead" areas.

(b) Given suitable materials the light collection from a piece of scintillator can be made very uniform. This is a particularly important feature for work with steeply falling high p_T spectra.

Two of the basic principles governing the design of a satisfactory system have been excellently described by Keil.

(1) The materials used must have suitable absorption and emission spectra so as to match the scintillator to the wave-shifter bar(WSB), and the latter to the photomultiplier used.

(2) For uniform response over the area of the scintillator, as well as for high final light output, both the scintillator and the WSB must not have too great self-absorption effects.

In addition to these two principles, three others are of high importance for a calorimeter to be used to measure steeply falling high-p_T spectra:

(3) The scintillator-WSB combination, and the actual light pipe system to be used, must deliver sufficient signal so that the calorimeter energy resolution is not badly worsened because of statistical fluctuations due simply to low numbers of photoelectrons.

(4) The decay time of the WSB should be relatively short, to permit selection

of the desired rare events in the presence of a high total beam interaction rate.

(5) The calorimeter must not have "hot spots"[5,16], and therefore the signal produced when particles pass through the WSB must not be larger than that produced when particles pass through the scintillator.

In order to make a first determination of the practicality of satisfying these 5 principles, we made measurements of

(i) the light output in bars of different materials, candidates for scintillators and for WSB's, when traversed by fast charged particles,

(ii) the uniformity--i.e., the self-absorption effects--in bars of these different materials,

(iii) the light output of different combinations of scintillators and wave-shifter bars,

(iv) the uniformity of response over the scintillator area, for various scintillator-WSB combinations.

These measurements are described in Sections 5 and 6 below. In the remainder of Section 4 we describe the way in which we arrived at a choice of converter material for a solid-scintillator system.

4.2 Characteristic Wavelengths of Various Materials

In Table I we list some characteristic wavelengths of various materials we worked with, and of two photomultiplier cathode types. The peak positions in ethanol are taken from Berlman[22], except for Coumarin 102[23]. The BBQ peak positions were measured by us. The photocathode peak absorption wavelengths are taken from the RCA photomultiplier specifications listing[24]. From the data shown in Table I, one can make a preliminary choice of materials which may be well matched. For example, PPO, a common primary scintillator phosphor, gives light which is well absorbed by either POPOP or bis-MSB, common wave-shifter "secondary" phosphors, which in turn give light at a wavelength well matched to the common photocathodes listed. Of course Table I gives only a first indication of the matching quality of different combinations. A more detailed evaluation can be made by examining the full details of the emission and absorption spectra. In particular the critical question of the magnitude of self-absorption effects for a given fluorescent material depends on the detailed shape and magnitude of its absorption and emission spectra where the two overlap.

4.3 The Use of Waveshifter-less Scintillator

Normal scintillators contain both a primary and a secondary ("wave-shifter") phosphor. An obvious first approach to making a conversion-type WSB light collection system is to try to leave the wave-shifter out of the scintillator and put it instead into a separate fluorescent bar. We used this approach in the calorimeter described in Section 3, using special liquid scintillator with only a primary phosphor, PPO, and using one of the common secondary phosphors, bis-MSB, in a separate acrylic WSB. Detailed measurements[18] showed that this wave-shifter-less liquid scintillator, and MSB bar, gave adequate light output and satisfactory uniformity for initial calorimeter tests, as described in Section 3.

While we were developing this liquid-scintillator-and-converter system we also tried to make a similar system using waveshifter-less solid scintillator instead of liquid scintillator. We prepared numerous possible scintillator samples, and also had many samples cast for us by experienced plastic fabricators. All of these samples used acrylic (PMMA) as the base material. Although it was evident that aromatic type base materials such as PVT could give much more light output we were deterred from using it both for economic reasons and because of the relatively poor aging properties of common PVT-based plastic scintillator, with major surface crazing developing typically within months, as experienced by us and by numerous colleagues.

Our attempts to make an acrylic-based scintillator, using naphthalene as an intermediate energy transfer agent[25] and using PPO or p-terphenyl as the "primary" scintillator solute, with no further wave shifters, gave poor results. All of the samples we tested had very severe internal absorption, and consequently very low light output from samples of the size needed for a practical calorimeter.

4.4 Solid-scintillator-and-converter Systems with Waveshifter in Both Materials

Since the attractiveness of a solid-scintillator system was great, even if the disadvantages of normal plastic scintillator were to limit its use to only a part of the final large scale calorimeter array, we proceeded to investigate the use of normal plastic scintillator in a converter-type arrangement. For this purpose we first tried a green fluorescent wave-shifter for the converter bar, a wave-shifter used in Nuclear Enterprises' NE-103. Although the resulting green light is not as well matched to normal photomultiplier photocathode sensitivity curves as is the blue light from normal scintillators, we found we could get a sufficiently large signal from such a system. Our first measurements on such a system were made using NE-103 for the converter bars.

For a practical calorimeter system for use in experiments with steeply falling high-p_T spectra one can not make converter bars out of material such as scintillator, since particles passing through the converter bar would make a signal much larger than the signal from particles passing through the (non-converter) main scintillator, and this is intolerable in a detector for such high p_T experiments. Accordingly, we undertook the fabrication of waveshifter converter bars which would use the same "green" waveshifter used in NE-103, but which would not give a large signal from particles directly hitting the converter bar.

4.5 BBQ Converter Bars

Nuclear Enterprises supplied us with a quantity of the waveshifter material, "BBQ", used by them in NE-103. We undertook to prepare, and to have prepared for us, BBQ-doped acrylic bars. Both our own efforts to make such material, and the efforts of experienced acrylic casting fabricators, showed that the BBQ inhibited the polymerization of methyl methacrylate, and the resulting doped acrylic bars had an uneven optical appearance as seen through the end of the bar. Since the existence of NE-103 made it clear that BBQ could be used readily to dope PVT, we also undertook to have BBQ-doped PVT prepared for us. Nuclear Enterprises Inc. very kindly prepared both BBQ-doped acrylic and BBQ-doped PVT for us, in samples of various thicknesses and with various BBQ concentrations. The BBQ-doped PVT had an excellent optical appearance, while the BBQ-doped acrylic had the uneven appearance we had previously found. We were nevertheless able, with these samples, to make tests of conversion efficiency and other properties, for both BBQ-in-acrylic and BBQ-in-PVT.

These tests showed (see Section 5) that the "direct" signal produced when charged particles passed through BBQ-in-PVT was many times larger than the direct signal for BBQ-in-acrylic. This difference presumably reflects the more efficient conversion by PVT than by acrylic of ionization-produced excitation and/or Cerenkov radiation into photons by the BBQ.

At about this time we were beginning to investigate the possible use of the acrylic scintillator just then developed by Kienzle with Roehm GmbH[21]. From light output tests we had already made, it was clear that if BBQ converter bars were to be usable with that acrylic scintillator they would be usable only for BBQ/acrylic and not for BBQ/PVT. Roehm kindly prepared various samples of BBQ-doped acrylic for us. These were of uniformly excellent optical quality. We tested this BBQ-acrylic material, as well as other material, in a converter-

type arrangement. From the results, described below, we concluded both that this BBQ-doped acrylic was highly satisfactory for a converter type calorimeter using acrylic scintillator (Rohaglas 1922[26]), and that the 1922 - BBQ combination was superior to any other acrylic-scintillator-WBS combination we tried. We accordingly finally adopted this combination of Rohaglas 1922 and BBQ bars for the calorimeter array we built.

5. Bar Tests of Light Output.

5.1 Test Setup, and Results

To measure the absolute signal produced by charged particles traversing different samples, we used the test setup shown in Figure 2. A Ru^{106} beta source was used to give traversing particles. The trigger counter was used to generate a gate signal for a PHA (pulse height analyzer), and the output pulses from the PMT shown, after passing through an adjustable attenuator, were displayed on the PHA.

The system was calibrated in terms of photoelectrons per PHA channel, using an LED instead of the Ru source. This calibration used the width of the pulse height spectrum from the LED to give the number of photoelectrons, $N_{p.e.}$, corresponding to the peak of the spectrum. Calibration was typically carried out with LED pulser voltage, and PMT high voltage, set to give a spectrum of FWHM about 23.5%. The pulse height spectrum under these conditions was very closely Gaussian, and our calibration calculation assumed that the standard deviation of that spectrum was given by

$$\frac{\sigma \text{ (in PHA channels)}}{\text{peak (in PHA channels)}} = \frac{1}{\sqrt{N_{p.e.}}} \; ;$$

we use this relation to calculate $N_{p.e.}$ from the observed ratio σ/peak. We have found by comparision with other methods of determining $N_{p.e.}$ that this procedure gives a close approximation to the actual number of photoelectrons.

The same photomultiplier, an RCA 6342A/V1 (bi-alkali), was used for all measurements.

Typically we calibrated with the attenuator (see above) set to 26 or 32 db, and the LED and HV adjusted to give $N_{p.e.}$ =100 at a convenient channel number, say at channel 100. Measurements on individual samples were then made by changing the attenuator setting until the sample produced a pulse height spectrum again peaking near channel 100. In this way, measurements could be made with good reliability and reproducibility down to signal levels as low as a few photoelectrons.

We made measurements on 12 samples. For each sample the measurement was made using a bar of 6 to 10 mm thickness. In each case the end of the bar was painted black, using a paint which gives total optical absorption. The PMT was optically shielded from any light originating in the trigger scintillator.

The results are given in Table II. The low light output from BBQ, MSB, and Coumarin 102, in acrylic, is to be particularly noted in comparison with the signal size from BBQ in PVT.

5.2 Self-Absorption Effects

We have made detailed self-absorption measurements on several materials. In general these measurements show results similar to those reported by Keil[11, 13]. As the Ru source and trigger counter are moved away from the "output" end of the sample, there is in general an initially very steep fall-off, followed by a slower nearly exponential attenuation. For the last three entries in Table II, the light output produced by the ruthenium source was too small to readily permit measurement of self-absorption. We report below, in Section 6.4, self-absorption measurements on BBQ bars using a different method of excitation.

6. Scintillator-Converter Tests.

6.1 Test Setup

For our calorimeter design, we chose to study mostly the triangular geometry described by Keil[12], because it promised to give both better uniformity and greater light output than a rectangular geometry. Accordingly, we worked with the test setup shown in Figure 3.

With this setup we measured the light output for different combination of materials (Sec. 6.2), the uniformity over the triangle (Sec. 6.3), and the conversion efficiency and self-absorption in the converter bar (Sec. 6.4). In all of this work we used triangle specimens always with a truncation at one corner, since for our calorimeter design we bring the light pipes out of each module through a truncated region at the corner of the module.

In this work, we studied at times the effect of a yellow filter introduced between the converter bar and the photomultiplier. It has become common practice to use such a filter to reduce the non-uniformity coming from self-absorption effects.

6.2 Light Output. Remarks on Materials.

We measured the light output from several different scintillator-converter combinations. Pilot F, Plexipop, and BBQ have been described above, in Sections 4.4 and 5.1. The fabrication and tests of α-NPO and Coumarin 102 were motivated by our attempt to find primary and secondary wave-shifters which would produce a final light spectrum peaked at shorter wavelength than the light from BBQ, so as to give higher photomultiplier efficiency. The peak wavelength for emission from Coumarin 102, as listed in Table I (for ethanol), appeared to offer the possibility of better matching to standard photocathode spectral response curves. And a preliminary investigation of the probable self-absorption effects and of the probable fluorescence decay time appeared promising[27].

For these measurements the Ru source was located near that corner of the triangle farthest from the converter bar.

The results of the measurements on 4 combinations are given in Table III. We give there also some measurements which give self-absorption information on the converter bars.

The results in Table III show the following.

(1) The α-NPO/Coumarin 102 combination gives very low light output. We checked the fluorescence decay time of the Coumarin bar and found it to be less than 5 nsec. We conclude that the spectra of α-NPO and Coumarin 102-in-acrylic are <u>not</u> well matched, or the Coumarin bar has severe self absorption, or both. The result, in any event, was so poor that we did not pursue this combination further.

(2) The Plexipop E/BBQ combination gives about the same 30% signal relative to Pilot F/BBQ as does the simple Plexipop E bar relative to the Pilot F bar (see Table II).

(3) The attenuation in the BBQ bar appears to be about 1% per centimeter, for distances of 5 cm or more from the output end, except for the α-NPO/BBQ combination, for which the rather large scintillator thickness made the measurements more difficult.

(4) The signal size from the Plexipop E used with this BBQ converter bar appears to be appreciably greater per mm of thickness than the direct signal for charged particles traversing the BBQ bar itself (Table II). The two signals can be brought closer to equality by using a "weaker" BBQ bar--see below.

6.3 Uniformity Over the Triangle

Next, using a BBQ bar, we made measurements with the Ru source and trigger

scintillator moved to various locations on the triangle. In Figure 4 we show the locations at which measurements were made. We found the surprising result, given in Table IV, that both for the Pilot F triangle and the Plexipop E triangle the light output was uniform to within ± 5% at all points measured. In this triangle geometry the light reaching the converter bar is the sum of light coming over many separate paths. Evidently this produces very great uniformity for the triangle size used, one half of a 15 cm x 15 cm square.

We report further measurements bearing on the uniformity, below.

6.4 Self-Absorption, and Relative Conversion Efficiency, for Different BBQ Bars

Using the setup of Figure 3, we studied the conversion efficiency, and self-absorption effects, in several different BBQ bars. For these tests, we used a yellow filter between the end of the BBQ bar and the photomultiplier. The filter was made of Rohm & Haas Plexiglas 2306[28], 3 mm thick. This material has a fairly sharp cutoff for wavelengths below 470 nanometers, and serves to reduce the effect of self-absorption in BBQ. Results are given in Table V.

6.5 Effects of Reflectors on the Converter Bar.

For short bars, for example for use with 15 cm x 15 cm modules, the self-absorption per cm indicated in Table V does not cause a very serious loss of light over the length of the bar. The uniformity can be further improved, and a substantially larger light output obtained, by using a reflector at the end of the converter bar. Accordingly, we tested bars of length which just matched the triangle edge, with and without Alzac (treated aluminum) reflectors at the end of the bar. At the same time we tested the effect of a long Alzac reflector running along the length of the bar on the side away from the triangle; the effect of this reflector is a measure of how much of the scintillator light fails to be converted on a single passage through the converter bar.

For these tests, two BBQ bars were prepared, 3mm and 6 mm thick respectively, and 12.7 mm wide by 17 cm long. At the photomultiplier end, each bar was cemented to a 5 cm long piece of clear acrylic, of the same transverse dimensions as the bar. A yellow filter, of Rohm and Haas 2306 acrylic, was used at the photomultiplier.

These measurements were made, for this report, at a time considerably after all measurements given earlier. With the passage of time, the Pilot F triangle used for these measurements, the same triangle used for the measurements of Tables III and V, had suffered extensive surface crazing, and the signal produced was

only about 60% of that found in the earlier measurements. (The photomultiplier sensitivity, and the signal level from Plexipop E converted with BBQ, had not changed significantly.)

The results of these measurements are given in Table VI. These results show that for these 17 cm long bars

(1) the end Alzac increases the signal about 60% for the 3 mm bar and about 75% for the 6 mm bar,

(2) the away side Alzac increases the signal about 30% for the 3 mm bar and about 12% for the 6 mm bar,

(3) if no reflector is present on the away side, the 6 mm bar gives about 50% more signal than the 3 mm bar; if an away side reflector <u>is</u> present, the increase is about 30%.

7. Final Comments.

On the basis of the measurements reported here, we built a 15 cm x 15 cm calorimeter module, using 3 mm BBQ bars, 0.02% concentration, and Rohaglas 1922 acrylic scintillator, which is similar to Plexipop E. The uniformity of response of this module was then carefully measured, using penetrating muons, in the M-5 beam at Fermilab. For muons traversing the module lengthwise, the response was found to be uniform to ± 3% at all points, including the waveshifter bars [17]. We thus found that Rohaglas 1922 and BBQ waveshifter bars, with the dimensions and concentrations given, produce a calorimeter module of very good uniformity.

Subsequent to the work here, we supplied samples of BBQ and BBQ-doped acrylic to B. C. Barish. Barish et al. have subsequently employed related techniques, using BBQ fluorescent converters[29].

We acknowledge with great appreciation the very generous assistance given us by C. Hurlbut and Nuclear Enterprises Inc., by W. Kienzle, by G. Widhalm and Roehm GmbH, and by K. Drexhage. We thank Everett Harvey for especially important assistance in the early development of the solid scintillator system, and we thank L. Cormell for invaluable assistance in the uniformity measurements on the final calorimeter module[17]. We also thank J. Bednar, T. Kondo, L. Kroger, and B. Yost for much assistance. This work was supported in part by the U. S. Department of Energy.

TABLE I. Characteristic Wavelengths of Various Materials

Material	λ, nm, for peak emission[a]	λ, nm, for peak absorption
A. In ethanol		
PPO	360	347
POPOP	410	358
bis-MSB	418	347
α-NPO	398	329
Coumarin 102[b]	466	389
B. In acrylic		
BBQ[b]	493	380
C. Photomultiplier cathodes [c,d]		
S-11		440
bi-alkali		385

(a) On a curve of photon flux per unit wave number.

(b) See text

(c) "Peak absorption" here denotes wavelength for peak quantum efficiency.

(d) At the BBQ emission peak, the RCA/photomultiplier brochure [24] gives typical quantum efficiency values of about 12.5% for S-11 and 13.3% for bi-alkali.

TABLE II. Light Output from Bar Samples

Material	Bar Thickness (mm)	Width, Length (mm) W	L	x(cm)	$N_{p.e.}$[a]	$N_{p.e.}$ per 6.35 mm
Pilot F[b]	9.5	12.7	100	7.5	174	116
NE 110[b]	6.35	12.7	200	10	100	100
Plexipop C[c]	10	12.7	100	7.5	31	20
Plexipop D[c]	10	12.7	100	7.5	48	30
Plexipop E[c]	10	12.7	100	7.5	43	27
α-NPO/acrylic C[d]	10	11	300	8	33	21
α-NPO/acrylic E[d]	10	11	300	8	29	18
BBQ/PVT[e] (0.25 gm/liter)	6.35	12.7	300	10	27	27
BBQ/PVT[e] (0.5 gm/liter)	6.35	12.7	300	10	29	29
BBQ/acrylic[f] (0.02% by weight)	6	12.7	600	10	1.3	1.4
bis-MSB/acrylic[b]	6.35	25.4	250	10	2	2
Coumarin 102/acrylic[f] (0.02% by weight)	6	12.7	600	10	1.5	1.6

(a) Measurement accuracy ±5%.

(b) Nuclear Enterprises Inc., 935 Terminal Way, San Carlos Calif. 94070

(c) Roehm GmbH, Darmstadt, Germany. Plexipop C,D,E were Roehm developmental types 1918/4820 C,D,E respectively. They are similar to Rohaglas 1921,1922, 1924 respectively.

(d) Acrylic scintillator specially prepared for us by Roehm--similar to Rohaglas 1922 but with α-NPO replacing the normal POPOP. α-NPO concentration 0.01% by weight in sample "C", and 0.05% in sample "E".

(e) Specially prepared for us by Nuclear Enterprises Inc.

(f) Specially prepared for us by Roehm GmbH.

TABLE III. Light Output from Different Scintillator/Converter Materials[a]

Scintillator[b] triangle	Converter Bar[c]	x(cm)[a]	$N_{p.e.}$[d]	$N_{p.e.}$ per 10 mm
Pilot F	BBQ	5	15.2[e]	16.0
		38	10.9	11.5
Plexipop E	BBQ	12.5	4.6[e]	4.6
		25	3.8	3.8
		37.5	3.5	3.5
α-NPO D[f]	BBQ	12.5	5	4
		37.5	3 (no peak)	2.5
α-NPO D[f]	Coumarin 102	12.5	< 1	< 1

(a) Setup as in Figure 3. The far end of each converter bar was painted black.

(b) For scintillator dimensions see Figure 4 and Table IV, and footnote (f) below.

(c) The BBQ and Coumarin 102 acrylic bars, both 6 mm thick, are described in Table II.

(d) Measurement accuracy ± 10% except when $N_{p.e.}$ is less than 3.

(e) The Pilot F and Plexipop E triangles were re-measured two years after the measurements given here. After this time interval the Pilot F triangle had developed substantial crazing. The results of the later measurements show that the signal size from the Plexipop E triangle was unchanged, while that from the crazed Pilot F triangle had dropped to about 60% of its original value.

(f) The α-NPO D triangle had 0.02% α-NPO in place of POPOP but was otherwise similar in composition to Plexipop E. The dimensions were (see Figure 4 for notation) A=10.8 cm, B=17.8 cm, C=3.8 cm, thickness =1.2cm.

TABLE IV. Uniformity over the Triangle[a,b]

Position[a]	Source location[a] x(cm)	y(cm)	$N_{p.e.}$[c]
A. Pilot F triangle[d]			
1	7.6	5.1	19
2	6.4	7.6	19
3	14.0	0.6	18.7
4	7.6	0.16	18.5
5	2.5	3.18	19.5
B Plexipop E triangle[d]			
1	7.6	5.1	5
2	6.4	8.9	5
3	12.7	1.3	4
4	15.2	1.3	4
5	8.9	0.6	4.5
6	2.5	3.2	5
7	4.4	0.3	5
8	4.4	1.9	5
9	6.0	0.5	5
10	6.0	4.4	4

(a) See Figure 4.

(b) Measured with a BBQ bar, 0.02% BBQ by weight, 6 x 12.7 x 290 mm, end painted black. Triangle starts 5 cm from photomultiplier. Triangle has edges covered with Alzac. See Figure 4.

(c) Measurement accuracy: ±3% for Pilot F, ±6% for Plexipop E.

(d) Dimensions of triangles: Pilot F--A= 10.2 cm, B=16.7 cm, C=3.8 cm, thickness =0.95 cm. Plexipop E--A=10.8 cm, B=17.8 cm, C=3.8 cm, thickness=1.00 cm.

TABLE V. Conversion Efficiency, and Self-Absorption[a,b]

Bar Thickness[c]	BBQ Concentration	x[a]	$N_{p.e.}$[d]	Approximate attenuation
2 mm	0.02% by weight	12.5 cm	7.6	2.8%/cm
		37.5	3.8	
3 mm	0.01%	12.5	5.2	0.8%/cm
		37.5	4.2	
3 mm	0.02%	12.5	8.5	2.0%/cm
		37.5	5.2	
6 mm	0.02%	12.5	13.5	1.0%/cm
		37.5	10.5	

[a] See Figure 3. A yellow filter was used for these measurements--see text.

[b] A Pilot F triangle was used. For its dimensions see footnote d, Table IV.

[c] All bars listed above are 12.7 mm wide, 60 cm long, and painted black at the far end.

[d] Measurement accuracy ±5%.

TABLE VI. Effects of Reflectors[a,b,c]

Bar Thickness[d]	Far end	Away side	$N_{p.e.}$[e]
3 mm	black[f]	blank	5.4
	black	Alzac	7.2
	Alzac	blank	8.9
	Alzac	Alzac	11.1
6 mm	black	blank	7.8
	black	Alzac	8.7
	Alzac	blank	13.9
	Alzac	Alzac	15.4

[a] See Figure 3.

[b] Pilot F triangle used, dimensions given in footnote, Table IV. The surface of this triangle was very crazed at the time of these measurements.

[c] A yellow filter, 3 mm thick Rohm and Haas 2306, was used for these measurements.

[d] Bars are BBQ in acrylic, 0.02% by weight, 12.7 mm wide x 17 cm long. See text for light pipe information.

[e] Measurement accuracy ±4%.

[f] "Black" means optically absorbing black paint. "Alzac" means Alzac with air gap.

References and Footnotes

1. J. D. Bjorken, in Proceedings of the Intl. Symp. on Electron and Photon Interactions at High Energies, Cornell University, 1971. See page 296.

2. B. Alper et al., Phys. Letters 44B (1973) 521.

3. M. Banner et al., Phys. Letters 44B (1973) 537.

4. F. W. Büsser et al., Phys. Letters 46B (1973) 47.

5. W. Selove, CERN Report NP 72-25, 1972 (unpublished).

6. F. Turkot et al., "Performance of a Sampling Calorimeter at 3 to 17 GeV", Univ. of Pa. Report, October 1973 (unpublished).

7. T. A. Gabriel et al., Nucl. Instr. and Meth. 129 (1975) 409.

8. This type of construction has been widely employed since the earliest use of hadron calorimeters. See V. S. Murzin, in Progress in Elem. Particle and Cosmic Ray Physics, vol. 9, (eds. J. G. Wilson and S. A. Wouthuysen; North-Holland Publ. Co., Amsterdam, 1967) p. 245.

9. An example of advanced performance of such sampling calorimeters at that time is reported in J. W. Engler et al., Nucl. Instr. and Meth. 106 (1973) 189.

10. W. J. Willis and V. Radeka, Nucl. Instr. and Meth. 120 (1974) 221.

11. G. Keil, Jour. of Applied Physics 40 (1969) 3544. This paper and reference 12 give references to earlier work.

12. G. Keil, Nucl. Instr. and Meth. 83 (1970) 145.

13. G. Keil, Nucl. Instr. and Meth. 87 (1970) 111.

14. M. D. Corcoran, Phys. Rev. Letters 41 (1978) 9.

15. A. R. Erwin, A Preliminary Look at Hadron Structure with a Double Arm Calorimeter, invited talk presented at the Vanderbilt Conference, March 1978 (to be published).

16. A. R. Erwin et al., "Some Early Results from a Segmented Calorimeter", in Proceedings of the Calorimeter Workshop, (ed. M. Atac; Fermilab, May 1975) p. 271.

17. L. Correll et al., A Calorimeter Array for High p_T Studies, in preparation.

18. T. Kondo, W. Kononenko, and W. Selove (unpublished).

19. Special liquid scintillator, prepared for us by Nuclear Enterprises Inc., 935 Terminal Way, San Carlos, Calif. 94070.

20. "Pilot 425", obtainable from Nuclear Enterprises Inc., San Carlos.

21. W. Kienzle et al., CERN Report NP 75-12, October 1975 (unpublished).

22. I. B. Berlman, in Handbook of Fluorescence Spectra of Aromatic Molecules, 2nd ed. (Academic Press, New York, 1971).

23. Kodak Publication No. JJ60-743, Vol. 46, No. 3 (1974), Eastman Kodak Co., Rochester N.Y.

24. "RCA" Photomultiplier Tubes", Publication PIT-700B, RCA, Harrison, New Jersey.

25. We are indebted to Mr. C. Hurlbut of Nuclear Enterprises, Inc., for many helpful discussions and much advice.

26. Available from Roehm GmbH, Darmstadt, Germany.

27. Dr. Karl Drexhage, Eastman Kodak Co. (private communication).

28. Rohm and Haas Co., Philadelphia, Pa.

29. W. B. Atwood et al., SLAC Technical Note TN-76-7, December 1976 (unpublished).

Figure Captions

Fig. 1. One gap of a 2-segment liquid-scintillator calorimeter. The faces of this compartment are made with "air" reflectors, sandwiches of acrylic sheet-air-acrylic sheet. The edges of the compartment have Alzac reflectors.

Fig. 2. Bar test setup. The PMT (photomultiplier tube) was an RCA 6342A/V1 (bi-alkali) for all tests.

Fig. 3. Triangle-and-converter test setup. For dimensions see Table III.

Fig. 4. Uniformity measurements on triangles. The numbers refer to the positions at which measurements were made. W = 5 cm. For all other dimensions see Table IV.

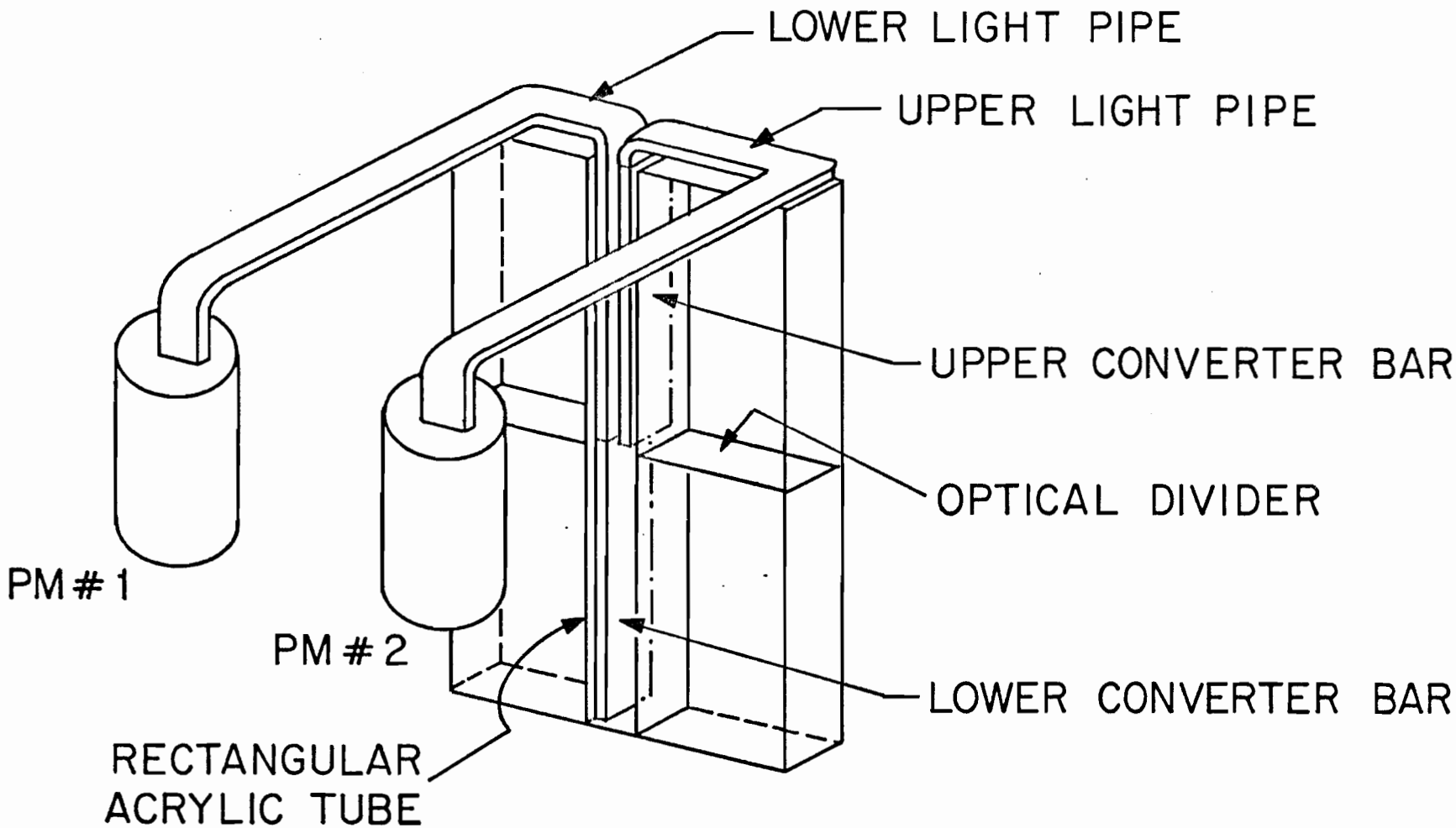
LOWER LIGHT PIPE
UPPER LIGHT PIPE
UPPER CONVERTER BAR
OPTICAL DIVIDER
LOWER CONVERTER BAR
PM # 1
PM # 2
RECTANGULAR
ACRYLIC TUBE

FIG. 1

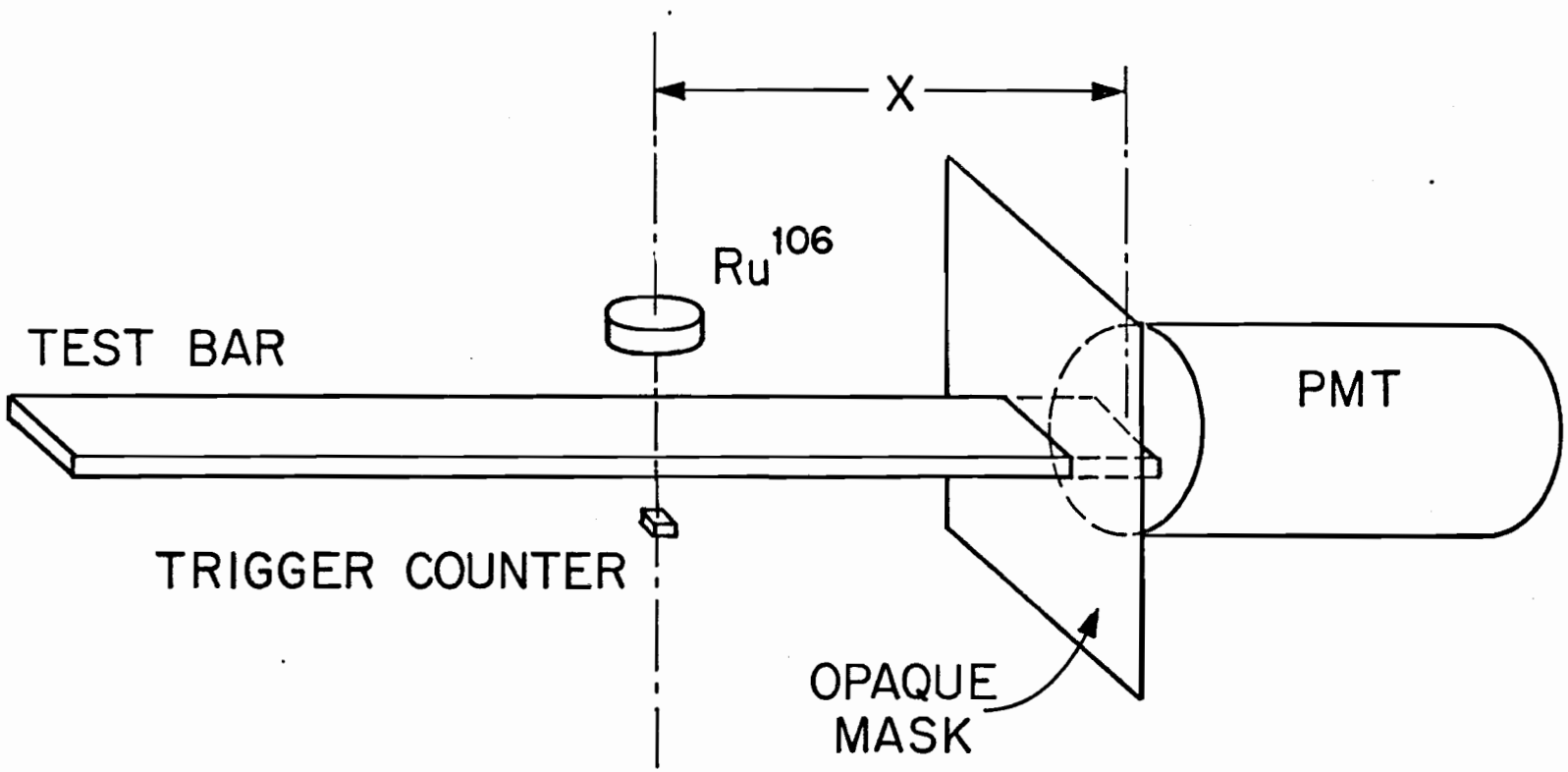

FIG. 2

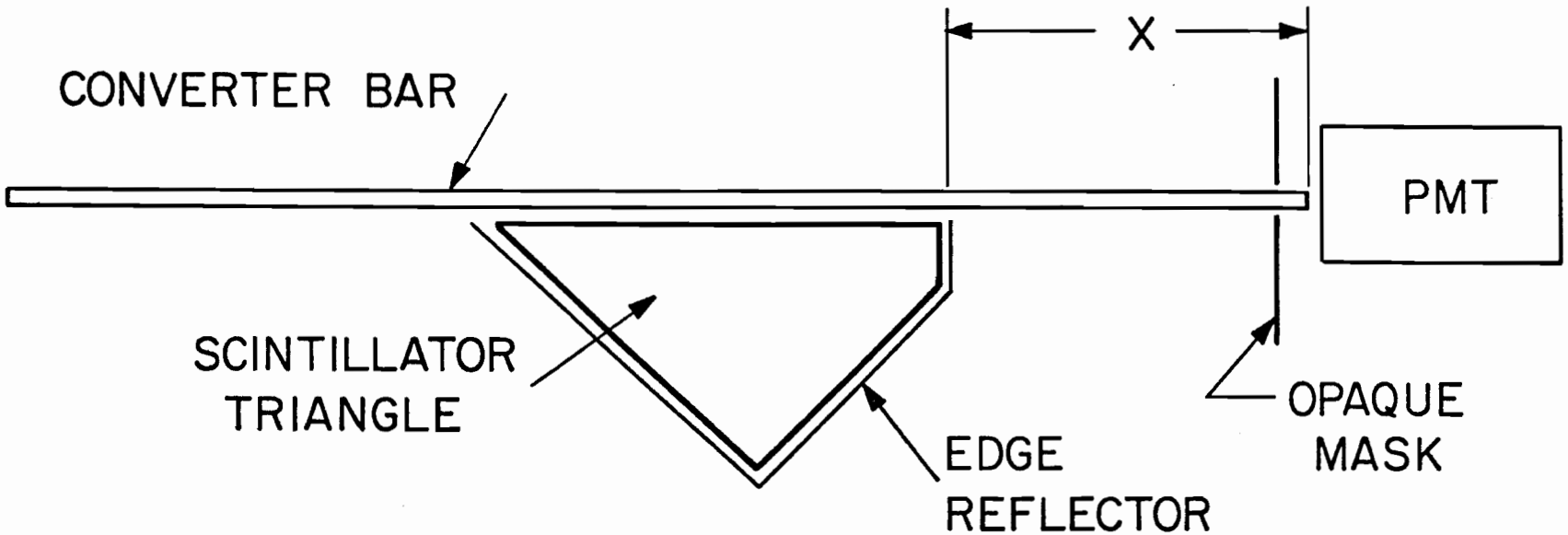
X
CONVERTER BAR
PMT
SCINTILLATOR
TRIANGLE
OPAQUE
MASK
EDGE
REFLECTOR

FIG. 3

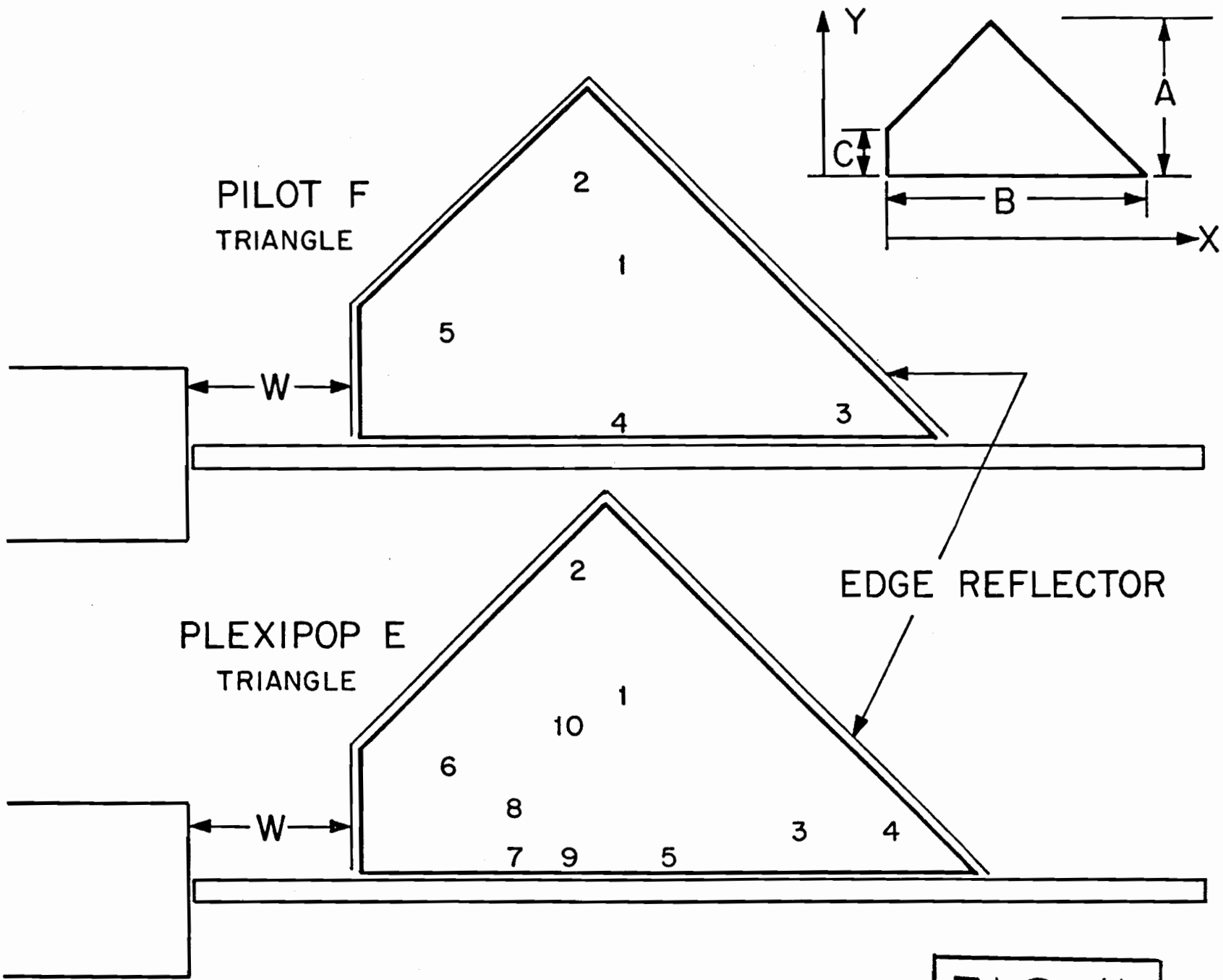
Y
A
C
B
X
PILOT F
TRIANGLE
2
1
5
W
4
3
EDGE REFLECTOR
PLEXIPOP E
TRIANGLE
2
1
10
6
8
W
7
9
5
3
4

FIG. 4