PUB-78-152-E
E-0243

Submitted to
Nuovo Cimento Letter.

Observation of a pair decay of short-lived neutral particles produced in 400 GeV/c proton interactions.

RECEIVED
OCT 18 1978
DIRECTORS OFFICE
FERMILAB

N.Ushida
Faculty of Education, Aichi University of Education
Kariya, Aichi, Japan

H.Fuchi, K.Hoshino, S.Kuramata, K.Niu, K.Niwa
H.Shibuya, S.Tasaka and Y.Yanagisawa
Department of Physics, Nagoya University
Chikusa-ku, Nagoya, Japan

Y.Maeda and H.Kimura
Faculty of Education, Yokohama National University
Hodogaya-ku, Yokohama, Japan

Because of high spacial resolving power, nuclear emulsion is, at present, the only technique by which we can directly observe the decay of short-lived particle with life time of $10^{-12} \sim 10^{-14}$ sec. The first evidence of such a particle was obtained by a Japanese group([1]) in 1971, in super high energy interactions due to cosmic rays. Mass and life time of the particle was estimated as $1.5 \sim 3.5$ GeV and $0.2 \sim 0.4 \cdot 10^{-13}$ sec, and this particle was named as the X particle. Just after the discovery, the X particle was pointed out to be a charmed particle by a Japanese theoretical group([2]).

Following the pioneering work, much effort has been concentrated on the emulsion experiment at accelerator energies to observe decays of such particles. Up to now, however, no direct observation of a pair decay of charmed particles has been reported in hadron interactions at accelerator energies. This paper describes the first observation of a proton interaction in which a pair production and decay of neutral

X particles was detected.

Detectors utilized are not pure emulsion stack, but so called emulsion chambers. Emulsion chamber is a complex detector which consists of more than hundred layers of two fold emulsion counters. Emulsion plate coated on both surface of thin plastic plate(350 μm thick lucite) or film(150 μm thick polystyrene) of 12cm × 9.5cm is used as an emulsion counter to detect positions of charged tracks. Spacial resolving power of the emulsion counter is extremely high and of the order of submicron. Emulsion counters are combined with thin lead plates(500 μm thick) or tungsten plates(300 μm thick) to form a target part and an energy momentum analysing part(7 ∿ 8 radiation length). Construction of the emulsion chamber is shown in fig.1.

Electrons are clearly discriminated from other charged particles by inspecting cascade showers induced by them in the analysing part. By the same principle, γ rays are also detected and measured their energy in this part. Moreover, momenta of charged particles are estimated by means of relative scattering method. High precision of measurement of the relative position of secondary particles to that of beams with known momentum, and high scattering signal due to lead or tungsten allow us to extend the applicability of the method up to TeV/c region([3]).

To study short-lived particle production, 7 emulsion chambers were vertically exposed to 400 GeV/c proton beams at the Fermi National Accelerator Laboratory. Out of our first series of study([4]), reported two cases of single observation of such particles in 1008 proton interactions. In the present series, 312 interactions were picked up by area scanning method and following back method of cascade showers detected in the analysing part. They were analysed inspecting kink,

vee and other correlated phenomena for a distance about 4.1 mm down stream from each vertex. Minimum detecting angle for kinks was of order of 0.1 mrad.

Six kinks, 3 hadronic and semileptonic vees and 22 secondary interactions were detected following 3860 secondary charged particles with total track length of 16.0 m. Assuming pions as dominant constituent of charged secondaries, 27 secondary interactions are expected. Obtained number is not inconsistent with expected one. All of kinks were observed singly, and distribution of angle ratio of deflection to emission is consistent with that expected from elastic scattering([4]). Among 3 vees observed, the hadronic vee in the event EM-34 was identified as an early decay of $K_s^0 \rightarrow \pi^{\pm} + \pi^{\mp}$ by geometrical and momentum analysis. The probability observing such a decay in 312 events under our analysing condition is estimated as $0.5 \sim 0.7$. The other hadronic vee in YI-100 was not identified. No associated kink was observed. Scanning has been continuing for an associated vee.

The last vee was detected in the Event EM-25 which took place in the plastic base of emulsion counter No.94. Number of produced charged particles are 14, and 6 γ rays were detected in the down stream part of the event. Momenta of all charged particles were estimated by the relative scattering method, and energy of γ rays were estimated by cascade shower analysis. Mean transverse momentum of 14 charged particles was measured to be normal as $\langle P_{t \cdot ch} \rangle = 0.31 \pm 0.4$ GeV/c. Among 6 γ rays, 2 were identified to be daughters of η meson with high energy, 106 GeV, and high transverse momentum, 1.17 GeV/c. Two others were coming from π^0 with normal transverse momentum. The rest two were found not pointing to original interaction vertex. Total visible energy of this event was $\sim$ 290 GeV. No leading charged particle was

observed. These suggest that missing energy of $\sim$110 GeV may be carried away by a neutral leading particle.

In the sensitive layer of emulsion counter No.93, just down stream of the original interaction, there appeared two legs, m and n of the vee as shown in fig.2a, b. The vertex point of the vee is estimated by the geometrical method to be 320 ± 20 μm down stream from the original interaction and near the upper surface of paper with thickness of 30 μm between two emulsion counters No.94 and No.93. No charged particle correlated to the vertex was observed within area covering 93% of the total solid angle in upper and lower emulsion counters. Relative angle of neutral line OV to the beam direction is $1.89 \cdot 10^{-2}$ rad. Emitting angles of the two charged legs relative to the neutral line OV are $\Theta_m = 3.90 \cdot 10^{-2}$ rad and $\Theta_n = 1.23 \cdot 10^{-2}$ rad. No coplanarity condition is satisfied among the neutral line OV and the two charged legs of the vee.

Track n was followed to 7 radiation length away and finally found to produce a nuclear interaction ($N_h = 2$, $n_s = 11$) in a lead plate above the emulsion counter No.3. Therefore, particle n was identified as a hadron. Momentum of this hadron was estimated to be $P_n = 52 \pm {}^{8}_{6}$ GeV/c. Transverse momentum of this hadron relative to the neutral line OV turned out to be $P_{nt} = 0.64 \pm {}^{0.10}_{0.07}$ GeV/c.

Track m suffered a number of small angle deflection due to bremsstrahlung, and severery deflected at 3 radiation length away in a lead plate above the emulsion counter No.42, emitting a γ ray which was materialized in the next lead plate. Ionization of the recoil track was observed as minimum and its momentum was estimated as 63 MeV/c by scattering in the lead pile. Besides those, several electron pairs by radiated γ rays were observed in the down stream extension of the bremsstrahlung lines as shown in fig.3 and 4. From the above features,

the particle m was identified as an electron(positron).

Energy of the electron m was estimated by the following method. At first, momentum of particle m in the range about 1 radiation length between the first and the second apparent bremsstrahrung point was estimated by relative scattering method. Next, energy of the electron pair from the first bremsstrahlung was estimated by the same method. Sum of these energy gave $P_m = 7.1 \pm {}^{2.5}_{1.4}$ GeV/c. The momentum of the electron m before the first apparent bremsstrahlung was also measured in the range of 0.07 radiation length in the target part. This gave a momentum of $P_m = 5.40 \pm {}^{2.13}_{1.19}$ GeV/c. The latter range is much shorter than the former one in radiation length, but the simple mean of the two momentum, $P_m = 6.25 \pm {}^{1.60}_{0.82}$ GeV/c, was considered in our further analysis. The transverse momentum of the electron m relative to the neutral line OV turned out to be $P_{mt} = 0.24 \pm {}^{0.07}_{0.03}$ GeV/c.

As mentioned before, the neutral line OV and two charged legs of the vee do not satisfy a coplanarity condition. The vee with a hadronic and an electronic leg in vicinity of an interaction suggest us a semileptonic decay of a short-lived neutral hadron V^0. Invariant mass of this particle was estimated for different identity of charged hadron assuming a neutrino as a missing neutral. Semileptonic decay of $K_L^0 \rightarrow \pi^{\pm} e^{\mp} \nu_e$ was rejected by the mass analysis. Semileptonic decay of strange baryons could be rejected considering small branching ratio and their life times. Fig.5a gives the mass of V^0 as a function of neutrino momentum, assuming a $K^{\pm}$ or $\Sigma^{\pm}$ as a charged hadron. If the particle V^0 is a meson, its mass reduces to that of charmed meson D^0, 1.863 GeV, for neutrino momentum of 7 GeV/c or 80 GeV/c. Considering the order of momentum of electron m, the lower neutrino momentum may be more plausible. In this case, transverse momentum of V^0 turns out

to be $1.23 \pm {}^{0.21}_{0.13}$ GeV/c, and the life time of $(3.02 \pm {}^{0.39}_{0.42}) \cdot 10^{-14}$ sec is obtained. If the particle V^0 is a baryon, similar analysis as above gives us the mass of V^0 equal to that of charmed baryon Λ_c, 2.26 GeV, transverse momentum of $1.21 \pm {}^{0.19}_{0.13}$ GeV/c and life time of $(3.75 \pm {}^{0.51}_{1.34}) \cdot 10^{-14}$ sec, for neutrino momentum of 6 GeV/c.

Another remarkable feature of the Event EM-25 is, as mentioned before, the fact that two of γ rays materialized in the downstream part of the event could not be traced back to the original interaction vertex. Fig.3 shows the Z projection of the two cascade showers induced by the two γ rays. Two flight lines of these γ rays were ascertained to intersect each other within an experimental error at the point 2930 ± 220 μm down stream from the original interaction. The estimated crossing point is in a 350 μm thick lucite base of the emulsion counter No.88. No correlated track was found out of a cuboidic volume of 10 mm^3 centered at that point.

Energy of each γ ray was estimated by the similar method as applied for the electron m, and it turns out to be $E_{\gamma d} = 11.1 \pm 3$ GeV and $E_{\gamma e} = 2.9 \pm 0.9$ GeV respectively. Relative opening angle of the two γ rays is measured as $\Theta_{\gamma\gamma} = 2.32 \cdot 10^{-2}$ rad, and the invariant mass of these two γ rays is estimated to be $M_{\gamma\gamma} = 0.13 \pm 0.04$ GeV. Therefore, this might be a π^0-meson with energy of 14 ± 3 GeV, which is a daughter of neutral particle X^0 decaying at the point X, 2930 μm down from the interaction vertex.

The possibility of a decay of neutral strange particle coming from up stream was examined. The up stream cone with half angle of $1.2 \cdot 10^{-1}$ rad in the chamber was scanned for other beam interactions. Incident beam density in this area was $2.4 \cdot 10^3$ protons/cm^2. No other beam interaction was found. During the exposure, a scintillation

counter with thickness of 1 cm was placed at 10 cm up stream of the chamber to moniter the beam intentity. Contribution of strange particles produced in the scintillator and decayed near the event vertex was, however, estimated to be negligible. Possibility of secondary interactions of neutral hadron simulating the observed phenomenon was also estimated to be negligible.

As mentioned before, missing energy of this event was estimated as 110 GeV. If another daughter of the X^0 is also a π^0 meson which carries away some part of this missing energy, γ rays from that particle should be also observed in the down stream part of the event. No other γ ray correlated the point X was observed within a cone with half angle of $0.5 \cdot 10^{-1}$ rad and depth of 2 radiation length. This also suppresses the possibility of the decay $K_S^0 \rightarrow \pi^0\ \pi^0$ or $K_L^0 \rightarrow \pi^0\ \pi^0\ \pi^0$.

The above feature suggests us a decay of another short-lived neutral particle produced at the original interaction into a π^0 meson and other neutral particle(s). Relative angle of the neutral line OX to the beam direction is measured as $\Theta_{ox} = 2.83 \cdot 10^{-2}$ rad. The deflection angle and the transverse momentum of the π^0 meson to the line OX is $\Theta_{\pi^0} = 1.4 \cdot 10^{-2}$ rad and $P_{\pi^0 t} = 0.20 \pm 0.04$ GeV/c. Assuming K^0 or Λ^0 as a missing partner, invariant mass of parent particle was calculated as a function of missing momentum as is shown in fig.5b. Giving momentum of 1.2 GeV/c to the K^0, we get a mass value of $M_{x^0} = 1.863$ GeV, transverse momentum of $P_{x^0 t} = 0.43 \pm 0.10$ GeV/c, and life time of $\tau_{xo} = (1.18 \pm {}^{0.34}_{0.20}) \cdot 10^{-12}$ sec. If the momentum of missing Λ^0 is 5 GeV/c, mass of X^0 reduces to that of charmed baryon Λ_c, 2.26 GeV, and transverse momentum of 0.53 ± 0.12 GeV/c and life time of $(1.17 \pm {}^{0.34}_{0.21}) \cdot 10^{-12}$ sec are evaluated.

Table I gives a summary of two observed neutral short-lived

particles, V^0 and X^0. Informations described above lead us conclude that the observation shows a pair creation and decay of neutral X particles(charmed particles), in the same event.

In this analysis, one pair of the X particle was observed inspecting 3860 secondary tracks of 312 proton interactions. In the first series of our study, two single X particles were detected following 17488 secondary tracks of 1008 events. Detection efficiency of short-lived particles in our observing volume was estimated as $\sim$ 65 % for life time of $\sim 10^{-13}$ sec. All types of decay of short-lived particles including such as neutral to all neutrals could be detected by our method. Corrected ratio of number of the X particles to that of produced charged particles is $3 \cdot 10^{-4}$. Assuming the same ratio in proton-proton collisions, corss-section of the X particle production at 400 GeV/c is evaluated as 76 ± 38 μb. This is not inconsistent with the cross-section for charmed particle production in hadronic interaction which was derived by non emulsion experiments([5]).

Life time of the two X particles reported in the present paper were $3.02 \cdot 10^{-14}$ sec and $1.18 \cdot 10^{-12}$ sec for meson case and $3.75 \cdot 10^{-14}$ sec and $1.17 \cdot 10^{-12}$ sec for baryon case. There may be different life times for different charmed meson and baryon states, neutral and charged ones, as in the case of strange particles. The problem of life time should be settled after observing a good number of hadronic interactions with a pair of charmed particles.

The suthors would like to express their sincere gratitudes to the staffs of the Fermi National Accelerator Laboratory for the successful exposure of emulsions, and to Prof. J.J.Lord, University of Washington, for offering processing facilities of emulsion films. They also express their gratitude to Fuji Film Comapny for providing with High

quality nuclear emulsion. They thank Miss E.Midori and Miss Y.Ieda for their careful scanning work.

Table I

Summary of the two vees.

	V^0	X^0
Flight length μm	320 ± 20	2930 ± 200
Emittin angle rad	$1.89 \cdot 10^{-2}$	$2.83 \cdot 10^{-2}$
Daughters	had + $e^{\pm}$ + ?	π^0 + ?
$\Theta_{daughter}$ rad	$\Theta_{had} = 1.23 \cdot 10^{-2}$ $\Theta_e = 3.90 \cdot 10^{-2}$	$\Theta_{\pi^0} = 1.4 \cdot 10^{-2}$
Visible momentum GeV/c	$P_{had} = 52 \begin{smallmatrix} +8 \\ -6 \end{smallmatrix}$ $P_e = 6.25 \begin{smallmatrix} +1.60 \\ -0.82 \end{smallmatrix}$	$P_{\gamma d} = 11.1 \pm 3$ $P_{\gamma e} = 2.9 \pm 0.9$
Assumed meson decay mode	$K^{\pm} e^{\mp} \nu_e$	$\pi^0 K^0$
Mass GeV	1.863 if $P_\nu = 7$ GeV/c	1.863 if $P_{k^0} = 1.2$ GeV/c
P_t GeV/c	$1.23 \begin{smallmatrix} +0.21 \\ -0.13 \end{smallmatrix}$	0.43 ± 0.10
τ sec	$(3.02 \begin{smallmatrix} +0.39 \\ -0.42 \end{smallmatrix}) \cdot 10^{-14}$	$(1.18 \begin{smallmatrix} +0.34 \\ -0.20 \end{smallmatrix}) \cdot 10^{-12}$
Assumed baryon decay mode	$\Sigma^{\pm} e^{\mp} \nu_e$	$\pi^0 \Lambda^0$
Mass GeV	2.26 if $P_\nu = 6$ GeV/c	2.26 if $P_{\Lambda^0} = 4.8$ GeV/c
P_t GeV	$1.21 \begin{smallmatrix} +0.19 \\ -0.13 \end{smallmatrix}$	0.53 ± 0.12
τ sec	$(3.75 \begin{smallmatrix} +0.51 \\ -1.34 \end{smallmatrix}) \cdot 10^{-14}$	$(1.17 \begin{smallmatrix} +0.34 \\ -0.21 \end{smallmatrix}) \cdot 10^{-12}$

References

(1) K.Niu, E.Mikumo and Y.Maeda; Prog. Theor. Phys., 46, 1644 (1971).

(2) T.Hayashi, E.Kawai, M.Matsuda, S.Ogawa and S.Shige-eda; Prog. Theor. Phys., 47, 280 and 1998 (1972).

(3) K.Hoshino, S.Kuramata, K.Niu, K.Niwa, S.Tasaka and Y.Maeda; Proc. Int. Cosmic Ray Symp. on H.E.Phenomena, Cosmic Ray Lab., Univ. of Tokyo, 155 (1974).

(4) H.Fuchi, K.Hoshino, S.Kuramata, K.Niu, K.Niwa, S.Tasaka, Y.Yanagisawa, N.Ushida, Y.Maeda and H.Kimura; submitted to Nuovo Cimento, A.

(5) A.G.Clark, P.Darriulat, K.Eggert, V.Hungerbühler, H.Renshall, B.Richter, J.Strauss, A.Zallo, M.Banner, C.Lapuyade, T.Modis, P.Perez, G.Smadja, J.Teiger, C.Tur, J.P.Vialle, H.Zaccone, A.Zylberstejn, P.Jenni, P.Strolin and G.J.Tarnopolsky; Phys. Lett., 77B, 339 (1978).

T.Hansl, M.Holder, J.Knobloch, J.May, H.P.Paar, P.Palazzi, F.Ranjard, D.Schlatter, J.Steinberger, H.Suter, W.Von Rüden, H.Wahl, S.Whitaker, E.G.H.Williams, F.Eisele, K.Kleinknecht, H.Lierl, G.Spalm, H.J.Willutzlsi, W.Dorth, F.Pydak, C.Geweniger, V.Hepp, K.Tittel, J.Wotschack, P.Bloch, B.Devanx, S.Loucatos, J.Maillard, B.Peyaud, J.Rander, A.Savoy-Navarro, R.Turloy and F.L.Navarria; Phys. Lett., 74B, 139 (1978).

Figure captions

Fig.1. Design of the emulsion chamber utilized in the present analysis. Pb-2; chamber consists of 500 μm thick lead plates and emulsion counters. W-2; chamber consists of 300 μm thick tungsten plates and emulsion counters.

Fig.2a. Super imposed micro-photograph of 5 films showing Z projection of the forward part of event EM-25.
Incident direction of proton beams is perpendiculer to the film plane. Each secondary track gives only one spot on each film.
B_1 is a spot due to reference beam.

Fig.2b. X projection of the event EM-25 showing a vee production.

Em; Emulsion, 50 μm thick.
Base; Lucite base, 350 μm thick.
Paper; Thin paper, 30 μm thick.

Fig.3. Z projection showing cascade shower development due to one of the vee, m, and other two γ rays coming from the point X.

Fig.4. Schematic illustration of the event EM-25.

Fig.5a and 5b.
Invariant mass of the V^0 and the X^0 as a function of missing momentum. M; meson case. B; baryon case.
Assumed decay mode; 5a-M; $V^0_M \rightarrow K^{\pm} e^{\mp} \nu_e$,
5a-B; $V^0_B \rightarrow \Sigma^{\pm} e^{\mp} \nu_e$, 5b-M; $X^0_M \rightarrow \pi^0 K^0$, 5b-B; $X^0_B \rightarrow \pi^0 \Lambda$.

fig 1 N. Ushida et al. (Observation of a pair ----)

$\times \frac{1}{2}$

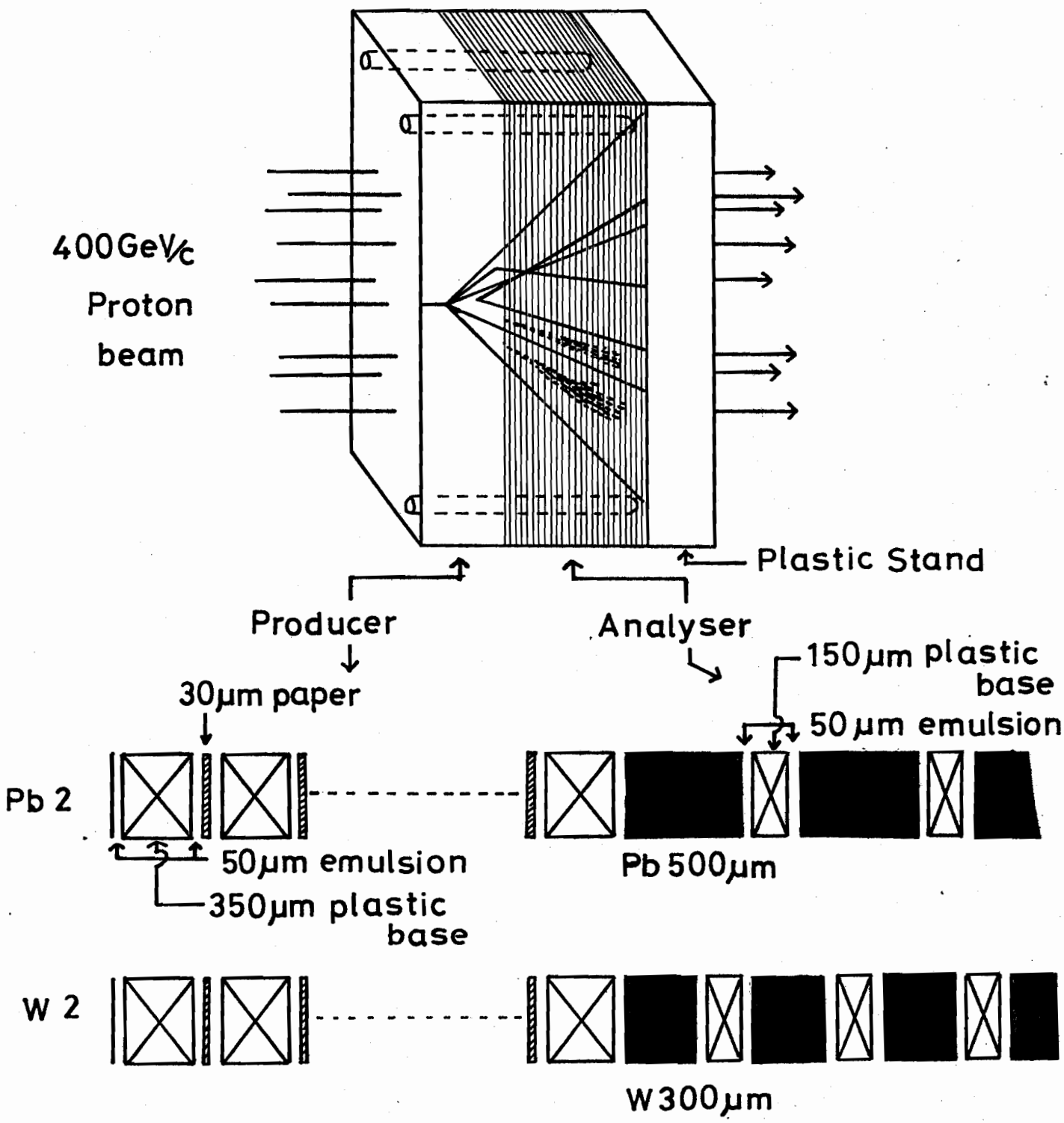

fig 2(a) N. Ushida et al. (Observation of a ...) × 1/3

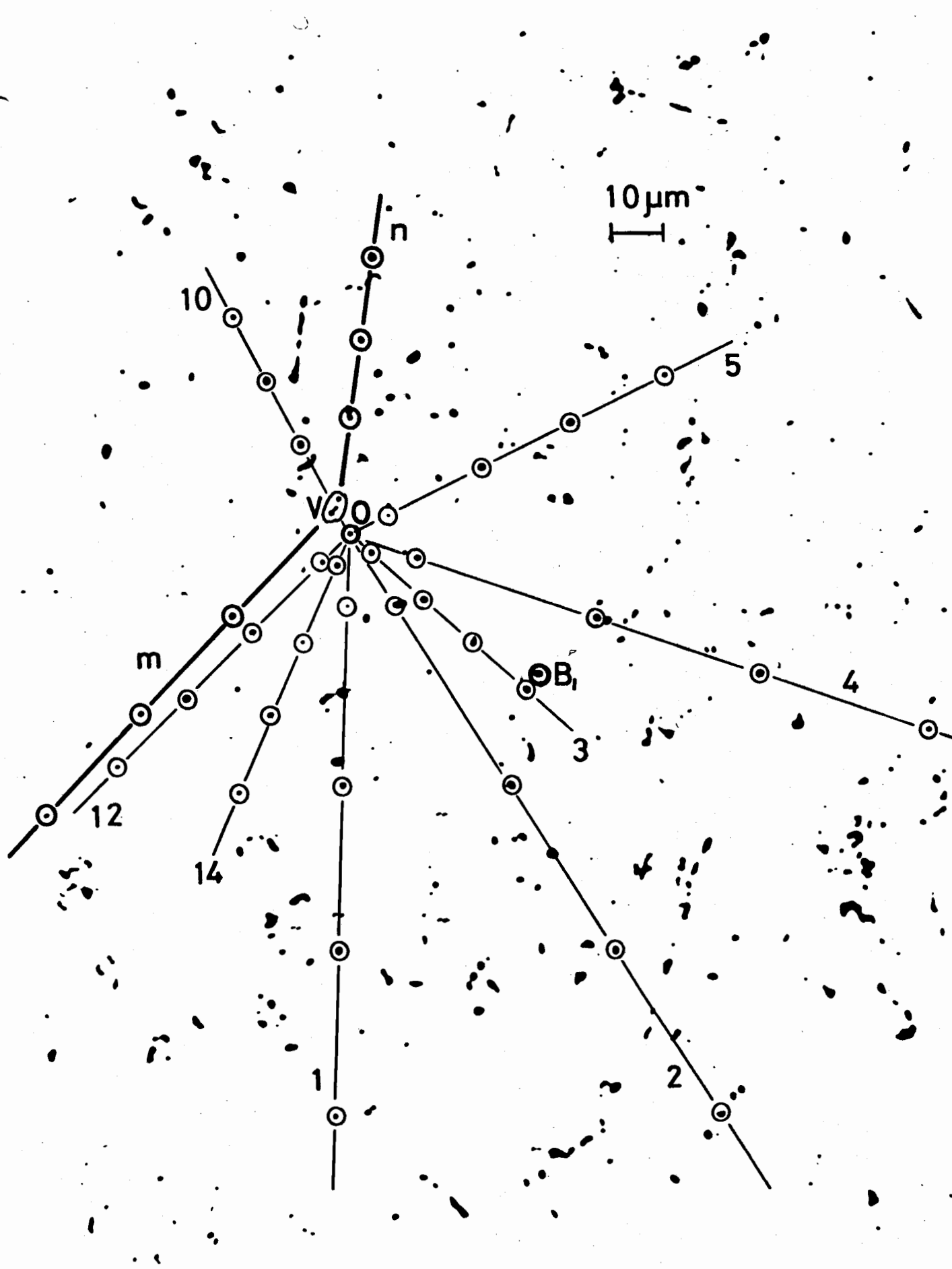

fig 2(b)

N. Ushida et al (Observation of a ...)

$\times \frac{1}{3}$

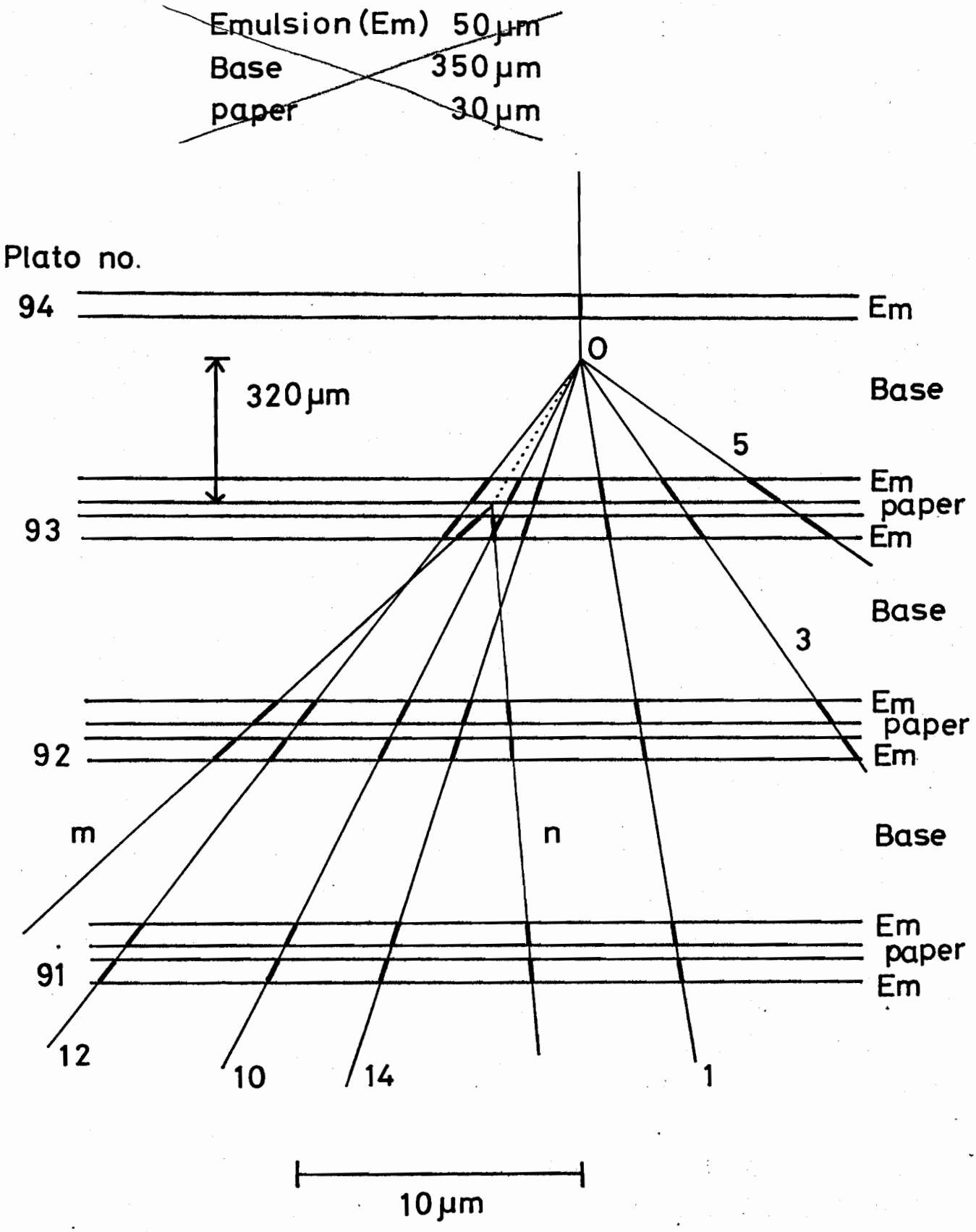

Fig 3 M. Oshima et al. (Observation of a ...)

$\times \frac{1}{2}$

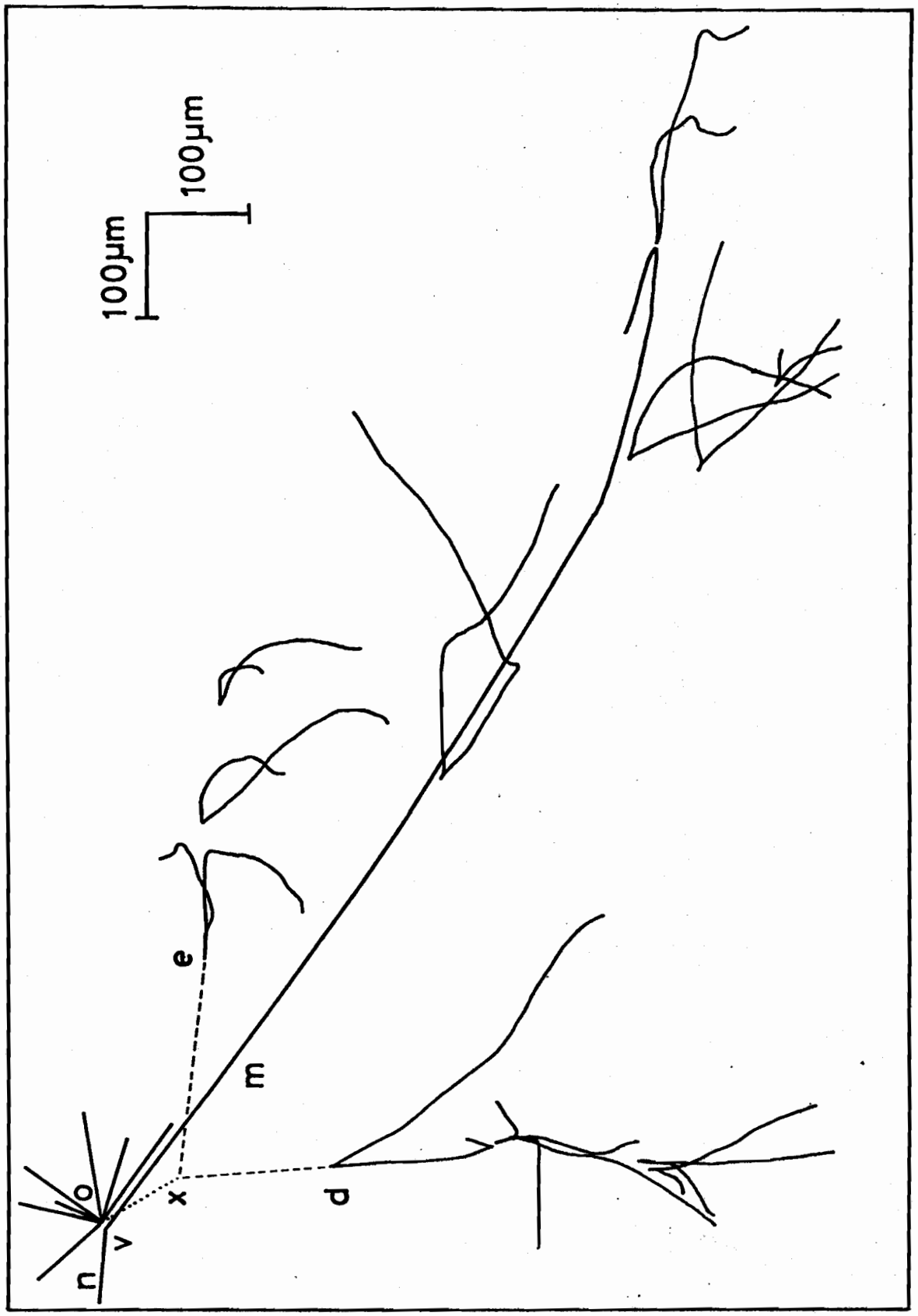

Fig 4 N. Ushida et al (Observation of a ...) $\times \frac{1}{2}$

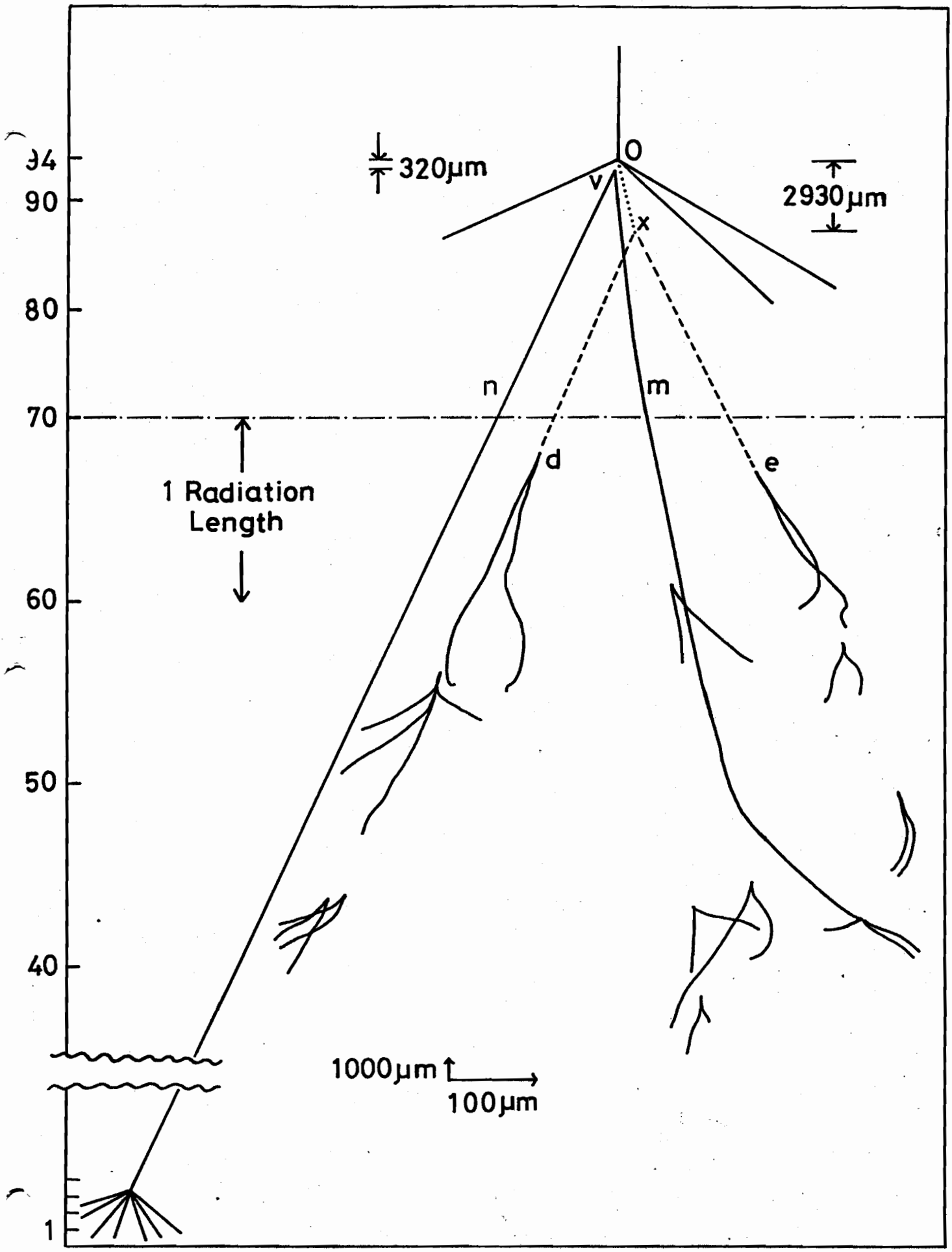

) N. Ushida et al. (Observation of a ....)) X $\frac{1}{2}$)
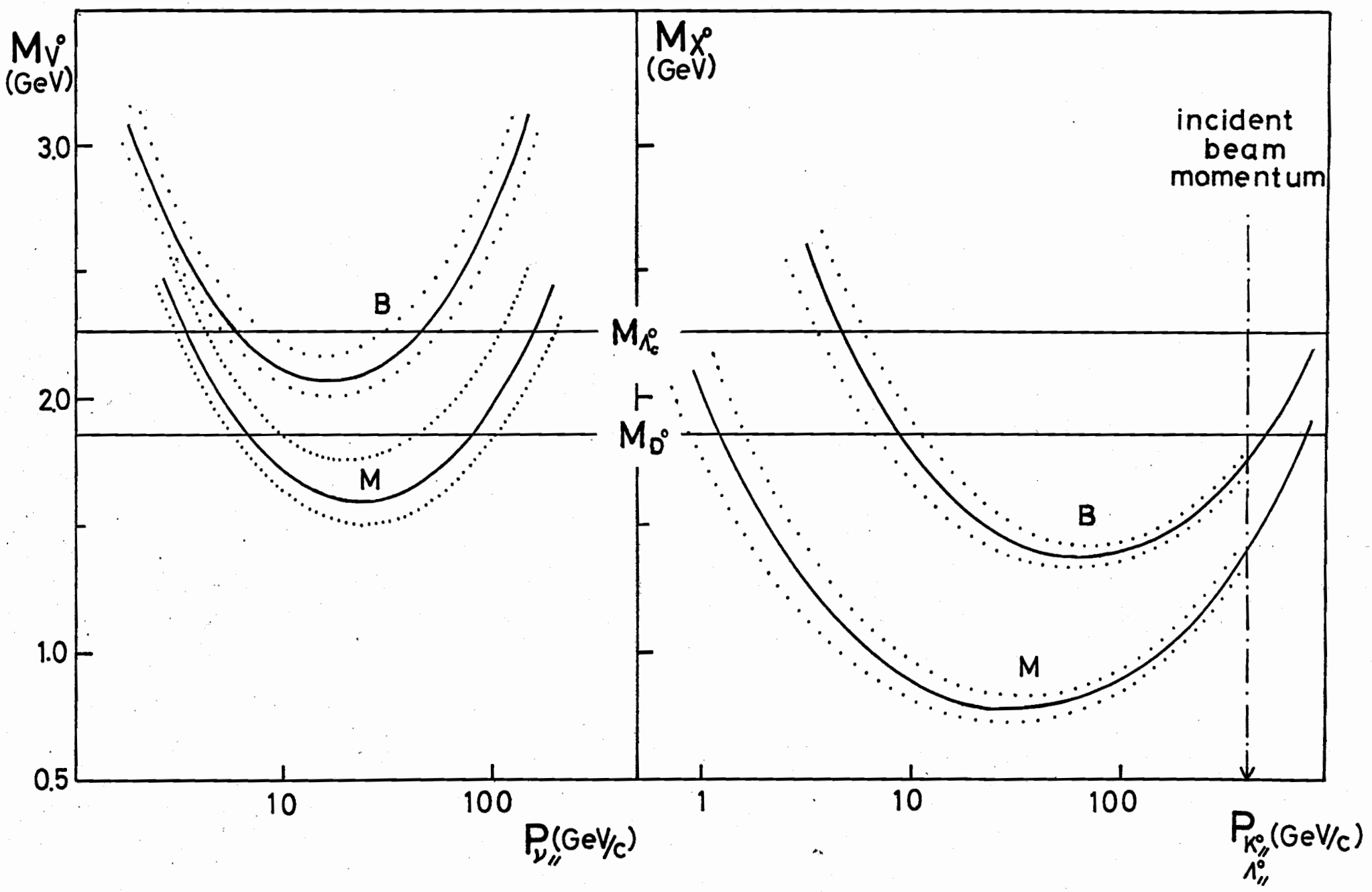
fig 5(a) fig 5(b)