FERMILAB-PUB-77-166-E

COO-3065-171 UR-620

Inclusive Charged-Particle Production in Neutron-Nucleus Collisions*

D. Chaney[†], E. Bleser[††], T. Ferbel[†], B. Gobbi[†††], D. Johnson[††], J. Keren[†††], R. Lipton[†††], W. Mollet[†], J. Rosen[†††], R. Ruchti[†††‡], P. Slattery[†], D. Spelbring[†††], and D. Underwood[†ʃ]

Abstract

We have measured inclusive particle production in neutron-nucleus collisions at high energies. Data on positive and negative particles produced in nuclei, ranging in size from Be to Pb, are presented for essentially the full forward hemisphere of the center of mass. Fits of the form A^{α} to the invariant production cross section indicate that α changes from ~0.85 to ~0.55 for laboratory rapidities ranging from 3 to 8. Multiperipheral models which invoke cut contributions to particle production in nuclei predict such behavior.

*Research supported in part by the United States Energy Research and Development Administration.

[†]University of Rochester, Rochester, N.Y., 14627 (Report UR-620)
[††]Fermilab, Batavia, Ill. 60510
[†††]Northwestern University, Evanston, Ill. 60201 (Report NW-EXP-4)
[ʃ]Present Address: Argonne Nat. Lab., Argonne, Ill. 60439
[‡]Present address: University of Notre Dame, Notre Dame, Ind. 46556.

There has recently been renewed interest in the study of hadronic production using nuclear targets[(1)]. This has largely been fostered by the hope that through an examination of particle production in nuclear matter we can obtain information about the space-time development of hadronic collisions during their nascent stages.

We have performed an experiment to measure charged-particle production in neutron collisions with the following nuclear targets: Be, Al, Cu, Sn, and Pb. The beam was the broad-band, 1 mrad, M-3 neutral beam at Fermilab, consisting of neutrons, with minor K_L^o, $\bar{n}$ and γ components. The neutron momentum spectrum was peaked at about 300 GeV/c, with a full width at half maximum of ~200 GeV/c.[(2)] The primary proton energy was 400 GeV.

Our experimental apparatus, shown schematically in Fig. 1, consisted of a single arm spectrometer with an aperture of ±80 mr in the horizontal (bending) plane, and ±2.4 mr in the vertical plane. The trigger requirement was that no charged particle registered in the veto counter A, and that a charged-particle traversed counters S and L. A was a 10 cm × 10cm counter located about a meter upstream of the target, S was located immediately downstream of the target, and L was a liquid scintillation counter situated downstream of the analyzing magnet about ten meters from the target. Except for a 0.75-inch thick lead radiator, positioned in front of the L counter (to aid in electron/hadron discrimination), there was no provision made for particle identification in the spectrometer.

The BM109 analysis magnet provided a 0.5 GeV/c transverse impulse to charged tracks. Trajectories were assumed to originate from the target and were measured using magnetostrictive wire spark chambers

downstream of the magnet. The small vertical dimension of the chambers (~1 inch) made pattern recognition relatively easy.

The neutron flux was monitored using a total absorption calorimeter[3]. We estimate that our absolute normalization is known to ±15%, but the relative normalization between elements is reliable to better than ±5%. The target thicknesses used were typically 2% to 5% absorption lengths of material. We ran with a beam intensity of ~50,000 neutrons during a two second spill and a beam-spot size of about 1mm in diameter.

The target-empty background subtractions ranged from 7% to 15% for the different targets. Electron contamination of the data, resulting from γ conversions of π^0 decays, was greatly reduced with the help of pulse-height information obtained from both ends of the L counter. Specifically, events with large signals in the L counter (caused by electron showers formed in the Pb converter) were eliminated from the sample, and appropriate corrections were made for the loss of hadrons that interacted either in the Pb converter or in the liquid scintillator. An internal check on this procedure was made using two thicknesses of Pb targets. The corrections for $p_T < 0.05$ GeV/c, particularly for $y_{LAB} \lesssim 5$, were quite substantial, and consequently these regions of phase space are poorly determined.

In Fig. 2 we display for the five elements, the measured multiplicity (i.e., the differential cross section for each element divided by the respective total inelastic neutron-nucleus cross section[4]) integrated over transverse momentum as a function of the rapidity in the laboratory frame (y_{LAB}). For the average value of the beam momentum, the rapidity for a particle at rest in the center of mass is about 3.2, consequently, our data span essentially the full forward hemisphere of the center of mass. The multiplicity shows the expected fall-off at

large y_{LAB} values, with the positively charged particles showing an excess over negative particles at the very largest values of y_{LAB}. This excess could be due to the presence of protons from neutron dissociation. (Using a pion mass for a possible proton track typically causes an upward shift of about 1.5 units in the value of the rapidity.)

The measured invariant cross sections were fitted to a function of the form A^{α}, where the parameter α is used to characterize the dependence of the data on the atomic weight A. Although this specific dependence is not in accord with all the data (α appears to decrease somewhat with increasing A), on the average it is a good approximation, and we have used this parameterization to allow comparison of our results with other available data[1].

The dependence of the multiplicity on A in Figs. 2(a) and (b) is displayed in terms of the α parameter in Figs. 2(c), and (d) for negative and positive particle production, respectively. It is observed that α changes uniformly over the entire region of y_{LAB}, indicating that the produced multiplicity is a continuously falling function of A as y_{LAB} increases. This result is expected from models which involve cut contributions to hadronic production in nuclear targets.[5]

The dependence of the cross section on A is examined in more detail in Fig. 3. There we display the values of α as a function of the transverse momentum (p_T) for three regions of y_{LAB}: $4 < y_{LAB} < 5$, $5 < y_{LAB} < 6$, and $6 < y_{LAB} < 8$; for negative particles in (3a), and positive particles in (3b). The variation of α with p_T appears to depend on y_{LAB}. In particular, the value of α for the smallest band of y_{LAB} drops rapidly with increasing p_T (for $p_T \lesssim 0.5$ GeV/c); however, at larger p_T, α appears to increase for negative particles but continues falling for positive particles.[6] (The difference could be attributed to the proton

component in the positive spectra.) At larger y_{LAB} the variation of α with p_T is less pronounced.

In conclusion, we have measured the A dependence of inclusive particle production in n-A collisions at high energies. Using the parameterization of A^{α} for the invariant cross section we have established that the dependence of the multiplicity on A varies with the rapidity in the forward hemisphere of the center of mass and is, in addition, a systematic, albeit complex, function of p_T.

We thank Drs. C. Brown, A. Greene and the Fermilab staff for their support of the experiment which provided the source of the present data.

References

1. An excellent summary and an extensive list of references is available in W. Busza, Proc. of VII International Colloquium on Multiparticle Production (Tutzing, 1976), J. Benecke et al.,eds.
2. Private communication from the Michigan Group (R. Gustafson et al, Fermilab Experiment 248).
3. We thank the University of Michigan Group for the use of their calorimeter monitor.
4. To obtain the differential charged-particle multiplicity we assumed that the inelastic cross section for n-A collisions is the same as for p-A collisions, namely 46 $A^{0.69}$ mb. See ref. 1 for details.
5. See, for example, J. Koplik and A. H. Mueller, Phys. Rev. D12, 3638 (1975) and A. Capella and A. Krzywicki, ORSAY Report LPTPE 77/16 (1976). In addition, see the review of N.N.Nikolaev (Preprint from the Landau Institute, Moscow - 1976).
6. Similar effects have been reported previously in measurements at different values of y_{LAB}. See, for example, J. W. Cronin et al., Phys. Rev. D11, 3105 (1975) and D. Garbutt et al., Physics Letters 67B, 355 (1977).

Figure Captions

1. Schematic of the apparatus.
2. Charged-particle multiplicity as a function of rapidity for different nuclei in (a) and (b). The symbols q^+ and q^- refer to positive and negative particles, respectively.
   The parameter α shown in (c) and (d) is from a fit of the cross section to the form A^{α}; α would be 0.69 if the multiplicity did not depend on nuclear size.
3. Variation of α with transverse momentum for three regions of y_{LAB}.

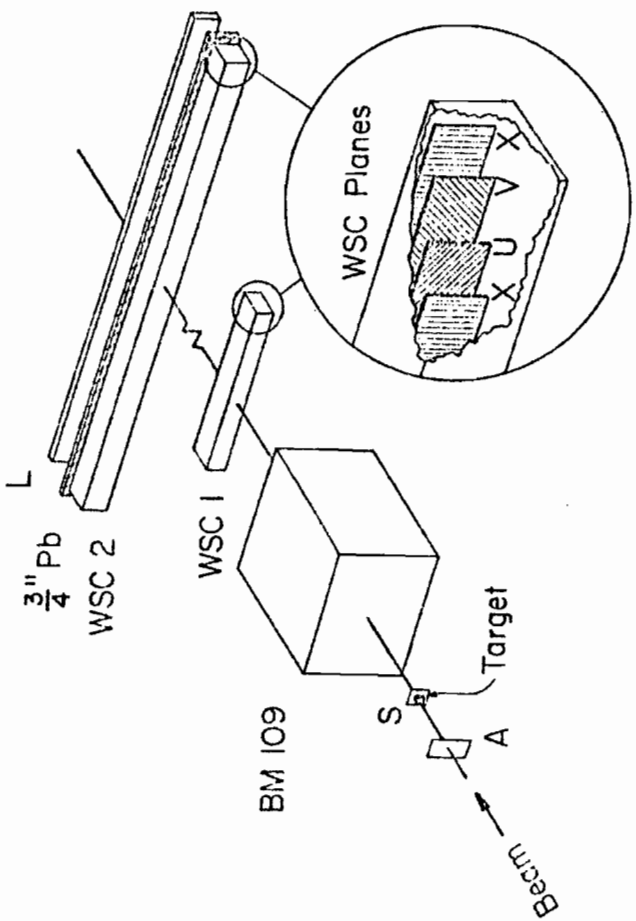

Fig. 1

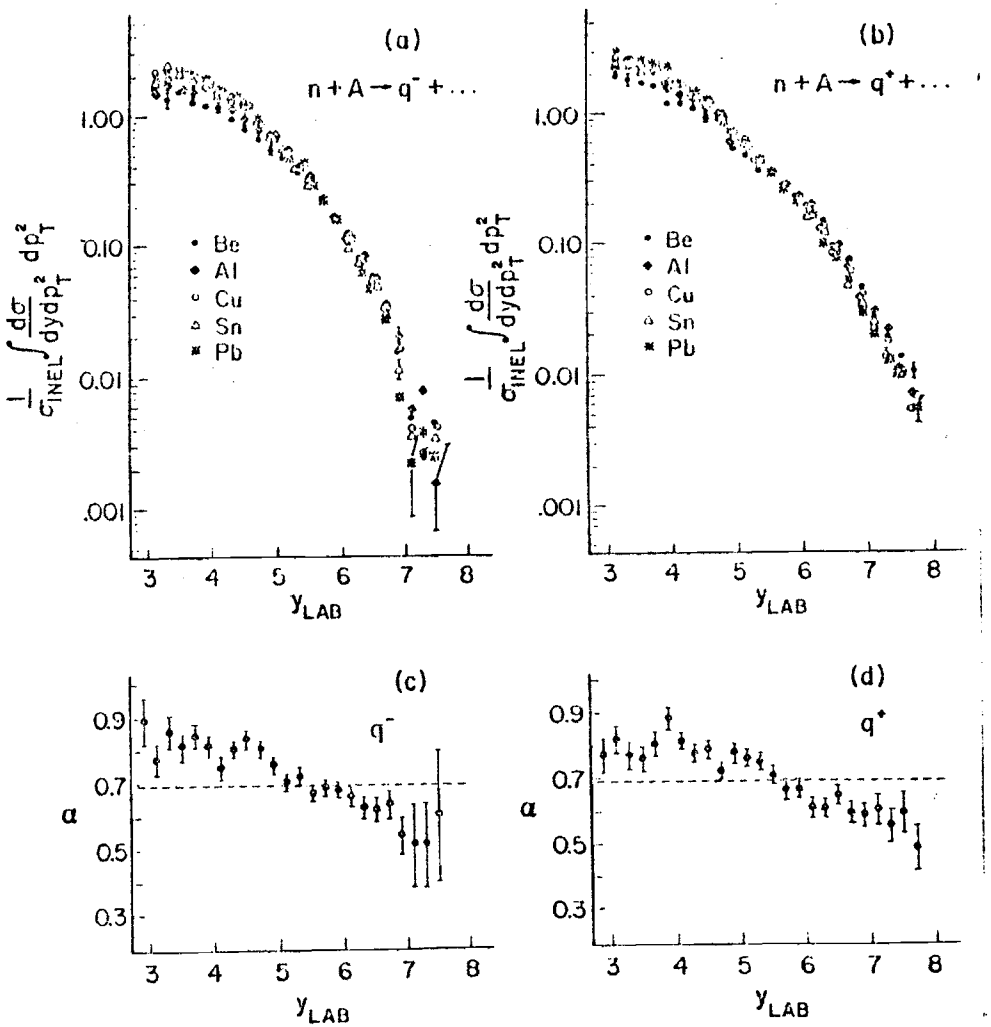
(a)
n + A → q⁻ + ...
(b)
n + A → q⁺ + ...
Be
Al
Cu
Sn
Pb
$\frac{1}{\sigma_{INEL}} \int \frac{d\sigma}{dy dp_T^2} dp_T^2$
y_{LAB}
(c)
q⁻
(d)
q⁺
α

Fig 2

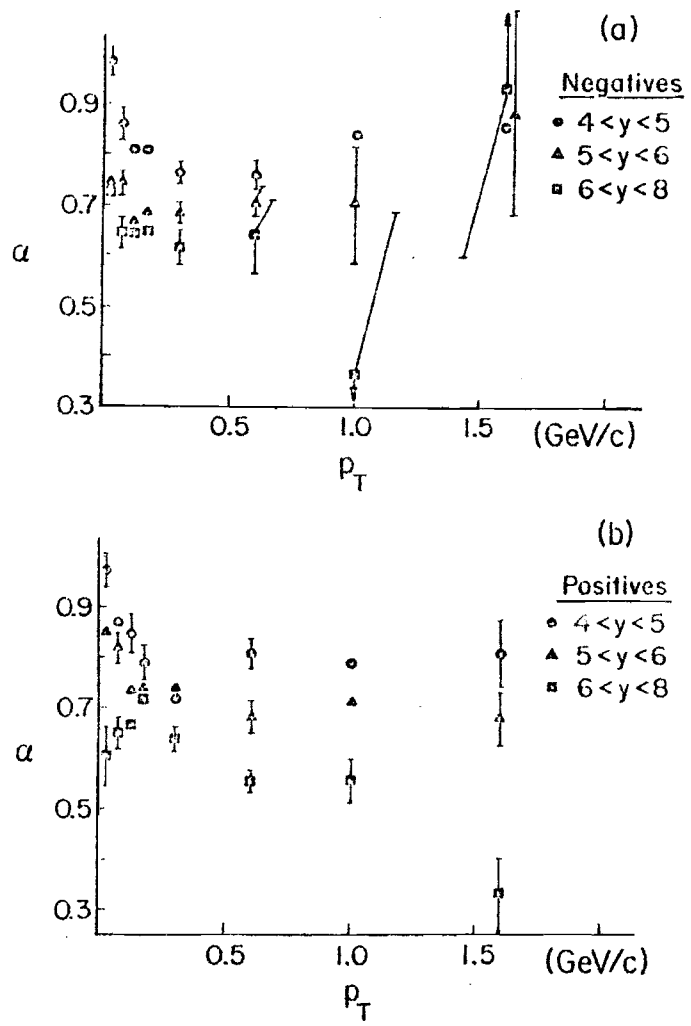
(a)
Negatives
4<y<5
5<y<6
6<y<8
α
p_T
(GeV/c)
(b)
Positives
4<y<5
5<y<6
6<y<8

Fig 3