PUB-77-145-E
1-2081

E81
Phys. Lett. B

FERMILAB-PUB-77-145-E

Submitted to Physics Letters B

1977 September 8

FERMILAB
OCT 7 1977
LIBRARY

Search for the Production of Particle-Stable Neutral Nuclei at Multi-GeV Energies*

Anthony Turkevich
The Enrico Fermi Institute and Chemistry Department
The University of Chicago, Chicago, Illinois 60637

James R. Cadieux
Chemistry Department, The University of Chicago
Chicago, Illinois 60637

John Warren
Department of Physics, Lakehead University
Thunder Bay, Ontario P7B 5E1, Canada

Thanasis Economou
The Enrico Fermi Institute, The University of Chicago
Chicago, Illinois 60637

Jerome LaRosa
Chemistry Department, The University of Chicago
Chicago, Illinois 60637

*Work performed under the auspices of the United States Energy Research and Development Administration.

Abstract

No evidence has been found for the formation of particle-stable neutral nuclei with $A \geq 6$ in 400 GeV proton-uranium interactions. The production probability limits are lower than published positive results from 24 GeV proton-tungsten interactions.

The availability of accelerators with previously inaccessible levels of intensity and energy has restimulated experimental searches for new nuclides of exotic composition. Among such nuclides are those carrying no electric charge (e.g. polyneutrons, ^{x}n, $x \geq 2$). In the energy region below 1 GeV, recent searches for the production of particle-bound polyneutrons have yielded only upper limits, both from 600 MeV proton interactions with lead,[1] and, much more sensitively, in experiments at the high intensity 800 MeV LAMPF accelerator involving proton interactions with uranium.[2] In contrast to these negative results, a recent publication[3] presents evidence for the possible existence of bound neutral nuclei. These latter results were obtained using 24 GeV protons interacting with a thick tungsten target as a production source. The detection method employed was the conversion of natural zinc isotopes ($A = 64 \rightarrow 70$) to ^{72}Zn by particles that were biased to be neutral by having to pass through 7 or 17 mm thick aluminum shields.

In order to check on this possibility that bound neutral nuclei might be formed at multi-GeV energies even though they did not appear to be formed at 0.7 GeV, an experiment has been performed at the Fermi National Accelerator Laboratory (FNAL) using 400 GeV protons interacting with uranium. This should be a more optimal production method than 24 GeV protons on tungsten if the incident energy and the neutron-proton ratio of the source are important.[4] At multi-GeV energies it is conceivable that neutral nuclear species with baryon

number > 4 might contain other neutral particles than neutrons. The present experiment would have some sensitivity for such species but has been specifically designed to detect polyneutron production and the results are discussed in terms of such species. The conversion of $^{208}Pb \rightarrow {}^{212}Pb$ was used as a detection method for polyneutrons, ^{x}n, with $x \geq 6$. This technique, although not sensitive to particles with $x < 6$, had provided the very low upper limits in the LAMPF experiment.[2]

The experimental arrangement in the FNAL experiment is shown in Fig. 1. The uranium target was 0.42 g/cm^2 and was cylindrically surrounded by 1 kg of especially pure lead. The inner aluminum wall separating the lead detector from the target was 0.11 g/cm^2 thick. The assembly was exposed for about 10 hrs to the 400 GeV external proton beam upstream of the main meson production target at FNAL. A total of 1.4×10^{16} protons went through the target (as measured by activation of Al monitor foils[5]) leading to a calculated 2.9×10^{13} proton-uranium interactions.

Neutral species produced in such interactions should escape from the uranium foil and interact with the surrounding lead with high probability. The probability, in the geometry of Fig. 1, of forming a $[^{(208+x)}Pb]^*$ compound nucleus was calculated by Monte Carlo methods to be 2.2 percent assuming a total interaction cross section for polyneutrons of 3.50 barns in the lead, 0.54 of which leads to compound nucleus formation.

After the irradiation, the lead was dissolved and assayed

radiochemically for ^{212}Pb by the techniques described in ref. 2. These involved "milking" the ^{212}Bi daughter of the 10.6 hr ^{212}Pb and measuring the 60.6 min ^{212}Bi (via the 8.78 MeV alpha accompanying its decay) by high efficiency, low background, silicon semiconductor detectors. The efficiency of the chemistry varied from 17 to 61 percent in five successive assays, and was established by the recovery of added ^{207}Bi tracer.

Measurement of the five samples yielded between 1 and 3 alpha events in each sample (a total of 8) in the correct energy region in the first several hours of measurements. The three samples that were measured for longer times showed events coming in at the correct energy even at these later times. This indicated that some ^{212}Pb (about 50 atoms) was picked up as contamination in the last stages of the radiochemical purification. Blank runs produced similar numbers of correct energy events in both the short (first few hours) and longer times of measurement.

Thus, this experiment gave no positive evidence for the detection of neutral nuclei in the 400 GeV proton bombardment of uranium. An upper limit for the production of polyneutrons can be calculated assuming that all the eight events observed in the first few hours of measurement were really from ^{212}Pb formed by such species. Taking into account the known efficiencies of the radiochemical assays (both chemical and measurement) and the decay of the ^{212}Pb and ^{212}Bi during the irradiation and subsequent processing, the eight observed events correspond to an upper limit of 3.3×10^{-10}

atoms of ^{212}Pb produced in the lead detector per 400 GeV proton interaction with uranium. From this number and the efficiency of the lead detector in the geometry of Fig. 1, the limits for the production of ^{x}n for various values of x between 6 and 12 are shown in Table I. These limits depend on the probability P(x) that an excited compound nucleus $[^{(208+x)}Pb]^*$ will decay by the emission of x - 4 neutrons to produce ^{212}Pb. This P(x) was calculated by standard evaporation theory[6] using the mass tables of Meyers[7] and a level density parameter $a = \frac{A}{20}$.

The limits presented in Table I are in contrast with the values reported by Détraz.[3] The upper limits from the present experiment are lower than the production cross sections indicated by his work and lower than predictions of such cross sections based on extrapolation of yields of other neutron rich species (see Table I, column 4). Moreover, the contribution of background effects (e.g. possible charged particle reactions leading to the production of ^{212}Pb, and the obvious presence of some radioactive contamination in the isolated assay samples) has not been subtracted out as yet. Considering the fact that the incident proton energy in the present work was significantly higher than in the work of Détraz, and that uranium should be a more optimal target than tungsten, the present results appear not to support the usefulness of multi-GeV proton reactions as sources of heavy neutral nuclides. The results are more consistent with the much lower upper limits (Table I, column 5) obtained at 0.7 GeV and suggest that particle-stable neutral nuclei

with more than five neutrons are not formed in high energy reactions with heavy neutron-rich nuclei and thus probably do not exist.

The apparent discrepancy between the results of the two experiments at multi-GeV energies may be due to either: (1) particle stability of a tetraneutron, to which the present experiment is insensitive, although previous searches for such a species have been unsuccessful;[8] (2) secondary production of neutral nuclear species in a thick target at multi-GeV energies (Détraz used a very thick tungsten target; the present experiment utilized a rather thin uranium target). Consideration of presently understood properties of the most obvious candidate--a multineutron system stabilized by one or more lambdas-is not encouraging in this regard.[9] (3) Finally, the conversion of natural zinc to ^{72}Zn as a detector of polyneutrons would appear to be more sensitive to undesirable side reactions than the $^{208}Pb \rightarrow {}^{212}Pb$ conversion utilized in the present work.[10]

We wish to thank the personnel of the Fermi National Accelerator Laboratory and in particular B. J. Holt for their assistance in the bombardment. The authors also gratefully acknowledge the participation of E. Blume and D. Boyce in target fabrication and monitoring during irradiation. The private communications of C. Détraz concerning progress on his work at 24 GeV are also appreciated.

Table I. Limits on the production cross-section (microbarns) of polyneutrons ^{x}n in 400 GeV proton-uranium interactions.

Assumed Number, x, of Neutrons in Polyneutron	P(x)[a]	Limits on Production Cross Section[b]	Cross Section Observed[c] in 24 GeV p+W	Predictions[c] for 24 GeV p+W	Limits[d] from 0.7 GeV p+U
6	0.0033	<9	85	500	$<1.1 \times 10^{-3}$
8	0.16	<0.2	70	10	$<2.3 \times 10^{-5}$
10	0.62	<0.05	300	0.20	$<0.7 \times 10^{-5}$
12	0.36	<0.08	—	—	$<1.0 \times 10^{-5}$

a - See text for definition of P(x).

b - Calculated from the number of events, 8, observed in the first hours' measurements of five assays, P(x), and experimental conditions described in the text.

c - See reference 3.

d - See reference 2.

FIG. 1. GEOMETRICAL RELATIONSHIPS OF THE URANIUM PRODUCTION TARGET AND LEAD DETECTOR IN THE SEARCH FOR PARTICLE-STABLE NEUTRAL NUCLEI.

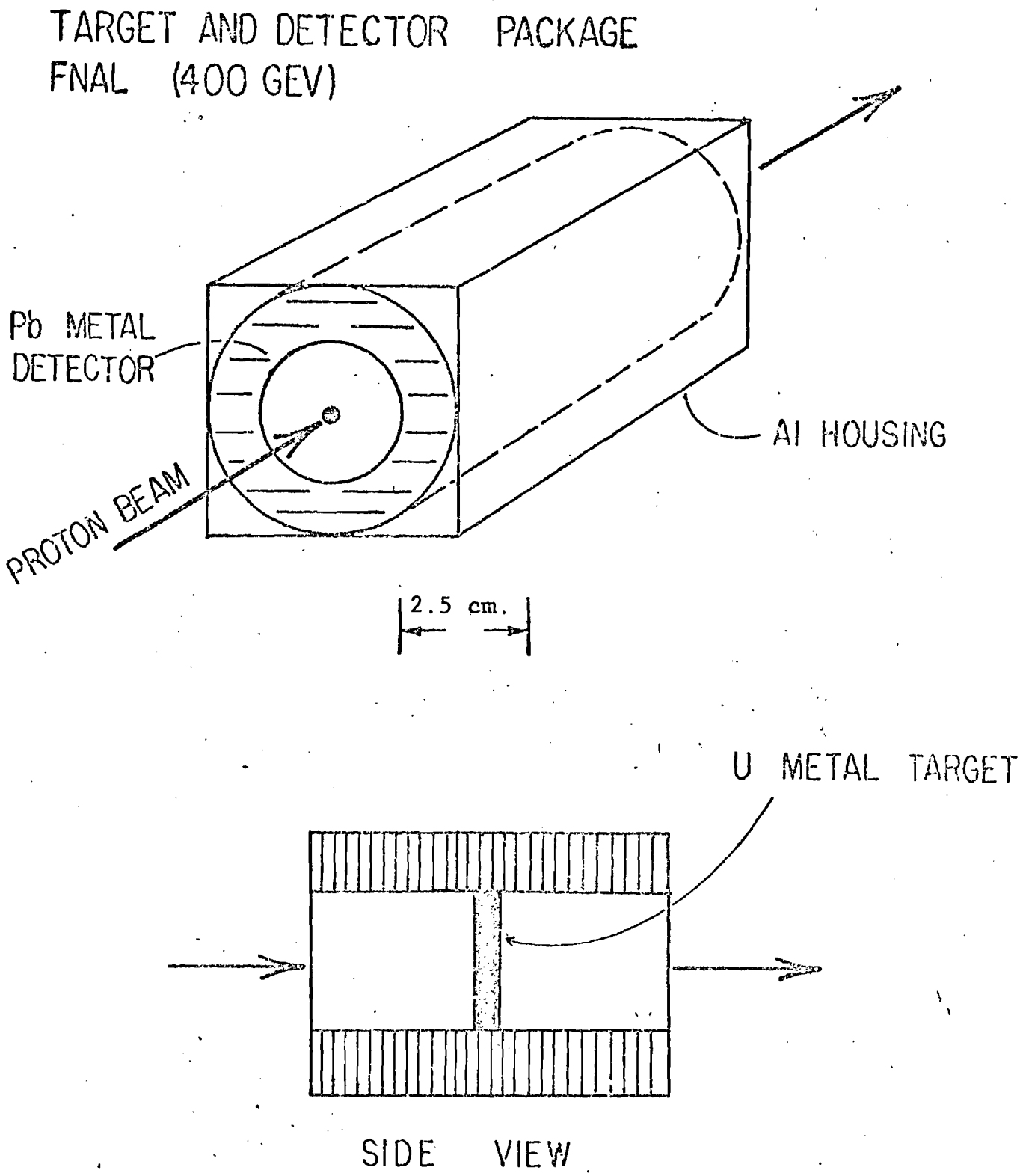

References

1. C. Détraz, Proceed. 3rd Int. Conf. on Nuclei Far From Stability (Cargese, Corsica, May, 1976).
2. A. Turkevich, J. R. Cadieux, J. Warren, T. Economou, J. LaRosa, and H. R. Heydegger, Phys. Rev. Lett. 38, 1129 (1977).
3. C. Détraz, Phys. Lett. 66B, 333 (1977).
4. E. N. Volnin et al., Phys. Lett. 55B, 409 (1975).
5. The following reaction and cross section were used: $^{27}Al(p,3pn)^{24}Na$, σ = 8.6 mb, S. B. Kaufman et al., Phys. Rev. 14C, 1121 (1976).
6. I. Dostrovsky, Z. Fraenkel and G. Friedlander, Phys. Rev. 116, 683 (1959).
7. William D. Meyers, Droplet Model Mass Table, Institut für Kernphysik, Technische Hochschule, Darmstadt, IKDA 75/16, (1975).
8. S. Fiarman and W. E. Meyerhoff, Nucl. Phys. A206, 1 (1973); S. Fiarman and S. S. Hanna, Nucl. Phys. A251, 1 (1975); F. Ajzenberg-Selove and T. Lauritsen, Nucl. Phys. A227, 1 (1974).
9. See e.g., R. H. Dalitz and R. Levi-Setti, Il Nuovo Cimento XXX, 489, 1963, or R. H. Dalitz, Nuclear Interactions of the Hyperons, Oxford University Press, 1965.
10. Very recently, C. Détraz has communicated to us that he has obtained evidence that (t,p) reactions could have been responsible for the observed activities in his detectors.