PUB-76-175-L
E-0365

E-365
Phys Rev Lett

NUB 2293 August 1976

Search for Forward Production of Massive States Which Decay With Muon Emission*†

G. J. Blanar□, C. F. Boyer, W. L. Faissler, D. A. Garelick§, M. W. Gettner, J. R. Johnson, M. L. Mallary, E. L. Pothier, D. M. Potter, M. T. Ronan δ, M. F. Tautz, E. von Goeler, and Roy Weinstein

Northeastern University at Boston, Boston, MA 02115

ABSTRACT

In a search for charmed particles the reactions $\pi^- + p \rightarrow p_r + \mu + X$ and $p + p \rightarrow p_r + \mu + X$ have been studied at beam energies of 200 and 240 GeV, respectively. Measurements of the beam particle and the slow recoil proton, p_r, were used to reconstruct the mass (M) of the $\mu + X$ system. Model dependent upper limits are presented for the forward production cross section times the muon branching ratio for high mass states ($6 < M^2 < 54$ GeV^2).

* Work supported in part by the National Science Foundation under Grant No. MPS70-02059A5.

† Measurements performed at the Fermi National Accelerator Laboratory.

□ Present address: CERN, Geneva, Switzerland

§ Supported in part by an Alfred P. Sloan Foundation Fellowship.

δ Present address: Lawrence Berkeley Laboratory, Berkeley, CA 94720

This paper reports the results of a charm search experiment which measured the reactions:

$$\pi^- + p \rightarrow p_r + Y, \qquad Y \rightarrow \mu + X \tag{1}$$

and

$$p + p \rightarrow p_r + Y, \qquad Y \rightarrow \mu + X \tag{2}$$

where X represents anything. Data on reactions (1) and (2) were taken at beam momenta (P_B) of 200 GeV and 240 GeV, respectively. The beam particle, the recoil proton, p_r, and the muon were measured. From the beam and proton measurements the mass (M) of Y was determined.

The object Y may be any massive system which contains particles which decay into at least one prompt muon + X. Y may contain unusual objects such as charmed particle pairs, heavy lepton pairs, singly produced heavy bosons or baryons, and/or just "normal particles" such as π, K, etc. The latter provide background. The unusual particles give rise to muons only above the kinematic minimum value of M. The experimental technique used is particularly sensitive to states Y which are resonances or which result from the diffractive excitation of the beam particle.[2] For diffractive production, the M spectrum is expected to rise rapidly near the kinematic threshold and then fall as an inverse power of M[1]. This experiment was primarily motivated by the expectation that there may exist a strong threshold enhancement in the M spectrum due to the production of charmed particles.

For calibration purposes data on the reactions:

$$\pi^- + p \rightarrow p_r + X \tag{3}$$

and

$$p + p \rightarrow p_r + X \tag{4}$$

were taken simultaneously with the data from reactions (1) and (2).

Other reactions studied simultaneously have been reported elsewhere.[3]

The apparatus for this experiment is shown in Fig. 1. It consists of beam defining counters (not shown), a 63 cm long hydrogen target, a spectrometer which measured the recoil proton, and a magnetized iron spectrometer which measured forward muons. The recoil spectrometer[4] consisted of a thin proportional chamber (PC1), four magnetostrictive wire spark chambers (SC1 to SC4), and five identical scintillator modules which subdivided the vertical aperture. Each module consisted of a 1.27-cm-thick scintillation counter (dE) to measure proton dE/dx and time-of-flight, a 29.0-cm-deep plastic scintillation counter (E) to stop the proton and measure its energy, and an anticoincidence counter (A) to veto particles which did not stop. From the measurements of the beam and recoil proton kinematic variables M^2 was measured to an accuracy of 2 GeV^2 (FWHM) with good mass acceptance for $0 < M^2 < 54$ GeV^2. The t acceptance was $0.1 < -t < 0.4$ GeV^2, where t is the square of the four momentum transferred to the proton.

The muon spectrometer[3] consisted of a 244-cm-long nonmagnetized iron hadron absorber (starting 54 cm from the H_2 target center) followed by a 305 x 54 x 54 cm^3 (useful volume) solid iron 18 kG magnet which bent the muons vertically. The counters M0 to M5 were used to identify a penetrating muon. The muon trajectories were determined by three magnetostrictive wire spark chambers (SC5 to SC7) at the rear of the magnet, and a multiwire proportional chamber (PC2) between the magnet and the hadron absorber. The muon transverse momentum, $P_{\perp\mu}$, was measured to $\pm$ 0.2 GeV, and its longitudinal momentum, $P_{L\mu}$, was measured to $\pm$ 16% (rms). The kinematic acceptance limits of the muon spectrometer were $P_{L\mu} > 18$ GeV and $P_{\perp\mu}/P_{L\mu} \lesssim 0.05$.

Monte Carlo studies show that the muon acceptance (A_μ) is well parameterized by:

$$A_\mu \simeq 1 - (M/P_B)\,(5.6\sqrt{E_{\mu\ cm}} + 9/E_{\mu\ cm}) \qquad (5)$$

for isotropic production of muons in the center of mass of the forward system (Y). $E_{\mu\ cm}$ is the energy (GeV) of the muon in this system. The functional dependence of A_μ on other variables is weak.

A coincidence between a beam particle, a recoil proton and a forward muon was required for an event to be recorded. In the analysis, accepted events satisfied the following criteria: only one beam particle; good tracks in the proton and muon spectrometers; vertex agreement between the proton, muon and beam particle trajectories; and identification of the recoil proton from the E and dE/dx measurements. The M^2 spectra for events which met these requirements are shown in Figs. 2a and 2b for reactions (1) and (2), respectively. These spectra have been corrected for the recoil proton acceptance. The vertical axis is $A_\mu B_\mu d\sigma_I/dM^2$ where $A_\mu B_\mu$ is the muon acceptance (Eq. 5) times the branching ratio into muons ($Y \rightarrow \mu + X$) and σ_I is the cross section integrated over the interval $0.1 < -t < 0.4\ GeV^2$. For comparison, the spectra of the corresponding calibration data ($d\sigma_I/dM^2$, no muon required) taken from reactions (3) and (4) are shown in Figs. 2c and 2d.

Qualitatively, the shapes of the spectra in Figs. 2a and 2b are similar to those of 2c and 2d, respectively. This indicates that there are no major structures induced in the mass spectra as a result of the muon requirement. In order to quantify these comparisons, the "raw" calibration data (not corrected for the proton acceptance) were fit to functions of the form:

$$dN/dM^2 = a + bM^2 + c/M^{2n} \qquad (6)$$

where a, b, c and n were free parameters in the fits. Good fits were obtained separately for the data from reactions (3) and (4) in the interval $4 < M^2 < 54$ GeV^2. These two functions were used as first order estimates of the shape of the continuum and the background (e.g. π, K inflight decay) in the data from reactions (1) and (2). The two functions were normalized to the corresponding "raw" muon data yields in the intervals $4 < M^2 < 54$ GeV^2 for the data from reaction (1), and $6 < M^2 < 54$ GeV^2 for reaction (2). The normalized functions were then subtracted from the "raw" muon data and proton acceptance corrections were made. The resulting spectra, data of reaction 1(2) minus the normalized yield of reaction 3(4), are shown in Figs. 2e and 2f. These subraction spectra have been fitted to straight lines (solid lines on Figs. 2e and 2f). The resulting χ^2's were 49 for 48 degrees of freedom (d.f.) for the data from reaction (1) (Fig. 2e), and 45 for 46 d.f. for the data from reaction (2) (Fig. 2f). Therefore, there are no statistically significant structures in these spectra.[5]

In order to extract upper limits on $A_\mu B_\mu \sigma_I$ for "unusual" particle production a number of models of expected line shapes were fitted to the spectra of Figs. 2e and 2f. Our motivation in this experiment was to search for charmed particle associated production for which we expect a threshold enhancement[2] due either to diffractive or resonant production. In general, the line shapes were assumed to be the sum of an enhancement at various masses, plus a linear background term, both folded with the mass resolution of the apparatus. To test for diffractive like production we fit the mass spectrum with a function in which $d\sigma/dM^2 = 0$ below threshold mass, M_T, and $d\sigma/dM^2 \propto 1/(M^2)^n$ above M_T.[6,1] The power n was taken from fits to the calibration spectra (Figs. 2c and 2d) with the form of Equation (6) ($n_\pi = 1.62$ in the pion data and $n_p = 2.0$ in the

proton data). To test for nondiffractive production[1], n was set to equal to zero ($d\sigma/dM^2 \approx$ const).[7] These fits also set upper limits on other unusual reactions such as the production of heavy lepton pairs.

If Y is a single object a resonance peak would be expected. (e.g. associated charmed particles might be produced in a resonant state.) To test for such narrower enhancements, a relativistic Breit-Wigner with widths varying from Γ = 50 MeV (below the resolution limit) to 800 MeV was used.

The upper limits (2 standard deviations) on $A_\mu B_\mu \sigma_I$ which were obtained from these fits are shown in Table I. In order to extract a total cross section limit, σ_{Tot}, from this table, further specific hypotheses describing the production and decay of "unusual" particles are necessary. For example, consider the case of inclusive diffractive charmed meson pair production from reaction (1) for which there are several specific effects which must be taken into account: (i) Either member of the pair (1 or 2) can decay by muon emission. Thus, for small branching ratios, the measured quantity in this experiment is $A_\mu \sigma_I (B_{\mu 1} + B_{\mu 2}) \equiv A_\mu \sigma_I \times 2 < B_\mu >$. (ii) For three body decays (eg, $K\mu\nu$), for a charmed meson mass of 2 GeV (M^2_{pair} = 16 GeV^2), the average center of mass energy of the muon would be $\approx$ 0.5 GeV, and from Eq. 5, $A_\mu \approx 0.56$. (iii) In order to estimate the total cross section we must assume the t dependence of the cross section. We take this to be the same as in reaction (3) ($d\sigma/dt \propto e^{-bt}$, $b \approx 5$ GeV^{-2}) in which case 50% of the production occurs in the observed interval $0.1 < -t < 0.4$ GeV^2. Therefore the limit in Table I, $A_\mu B_\mu \sigma_I \approx 210$ nb, must be multiplied by a factor of 1.8 to obtain a limit on the diffractive cross section times the average branching ratio of charmed mesons into muons. This limit is shown as a dashed curve on Fig. 2e. The two standard deviation limit on the inclusive charmed meson diffractive pair production cross section times

the average branching ratio is then $\sigma_{Tot} < B_\mu > = 380$ nb. The corresponding total cross section for $K\bar{K}$ diffractive production is approximately 0.5 millibarns.[8] With the above assumptions, the ratio of the charmed and strange total diffractive cross sections is $\sigma(D\bar{D}) < B_\mu > / \sigma(K\bar{K}) < 10^{-3}$.

We thank the Northeastern University Computation Center, the FNAL staff and crew, and the FNAL procurement group for their support, and the Brookhaven National Laboratory and Harvard University for the loan of equipment. We also thank E. King for his help with this work and F. C. Winkelmann for providing the preliminary data which aided in this experiment.

References

(1) F. C. Winkelmann et al., Phys. Rev. Lett., 32, 121 (1974) and M. Jacob et al., Phys. Rev. D6, 2444 (1972) discuss diffractive production.

(2) For examples of threshold enhancements at lower beam energies in $\pi + p$ see: C. Caso et al., Nuovo Cimento, 54A, 983 (1968) for the $\pi\rho$ threshold; J. Bartach et al., Nuclear Physics, B7, 345 (1968) for πf; G. Otter et al., Nuclear Physics, B96, 365 (1975) for πK^+K^-; B. D. Hyams et al., Nuclear Physics, B22, 189 (1970) for K^+K^-; and G. Grayer et al., Phys. Lett., 39B, 563 (1972) for $\bar{p}p$.

(3) G. J. Blanar et al., Phys. Rev. Lett. 35, 346 (1975); Proc. 1975 SLAC Summer Institute on Particle Physics and Proc. of the 1975 International Symposium on Lepton and Photon Interactions, Stanford University; Proc. of the Division of Particles and Fields of the APS, (1975) University of Washington, Seattle, Wash.

(4) D. Bowen et al., Phys. Rev. Lett. 26, 1663 (1971).

(5) Cuts on $P_{\perp\mu}$, $P_{L\mu}$, and the forward charged particle multiplicity, as measured in the detectors, MP1,2 (Fig. 1) do not affect this result.

(6) Resolution limitations make the exact behavior at threshold inconsequential here.

(7) For $M^4 \leq -t(2P_B)^2$ (the kinematic limit on M^4).

(8) The diffractive ($M^2 < 7$) cross section for $\pi^- + p \rightarrow p + K_s$ + anything at 205 GeV is 0.25 ± 0.13 mb (F. C. Winkelmann, private communication). From this we estimate the diffractive strange meson pair inclusive cross section is about 0.50 ± 0.25 mb.

Table I. Two standard deviation upper limits on $A_\mu B_\mu \sigma_I$ in nanobarns.

Threshold Behavior ($d\sigma/dM^2 \propto (1/M^2)^n$ for $M > M_T$, zero for $M < M_T$)

M_T^2 (GeV^2)	Pion Beam 6	16	35	48	Proton Beam 9	17	37	49	
Diffractive, n = 1.62	90	210	510	740	--	--	--	--	nb
Diffractive, n = 2.0	--	--	--	--	190	130	430	390	nb
Nondiffractive, n = 0	3400	1400	1600	1800	3700	1900	2700	1900	nb

Breit Wigner Behavior: ($d\sigma/dM^2 \propto 1/((M^2 - M_R^2)^2 + \Gamma^2 M_R^2)$)

M_R^2 (GeV^2)	Pion Beam 7	18	37	50	Proton Beam 11	18	39	50	
Γ = .05 GeV	31	32	37	39	73	35	42	25	nb
Γ = .2 GeV	43	62	54	58	92	44	57	44	nb
Γ = .8 GeV	85	97	116	188	161	79	115	157	nb

Figure Captions

1) The proton and muon detectors. For details, see text.

2 a) and b) $A_\mu B_\mu \, d\sigma_I/dM^2$ versus M^2 for reactions (1) and (2) respectively, where A_μ is the muon acceptance, B_μ is the branching ratio $(Y \rightarrow \mu X)$, M is the mass of Y, and $d\sigma_I/dM^2 = \int (d\sigma/dM^2 dt)dt$ over the interval $0.1 < -t < 0.4\ \mathrm{GeV}^2$.

c) and d) $d\sigma_I/dM^2$ for reactions (3) and (4), respectively

e) and f) $A_\mu B_\mu \, d\sigma_I/dM^2$ for reactions (1) and (2) with continuum background subtracted. Solid and dashed lines and additional details are described in text.

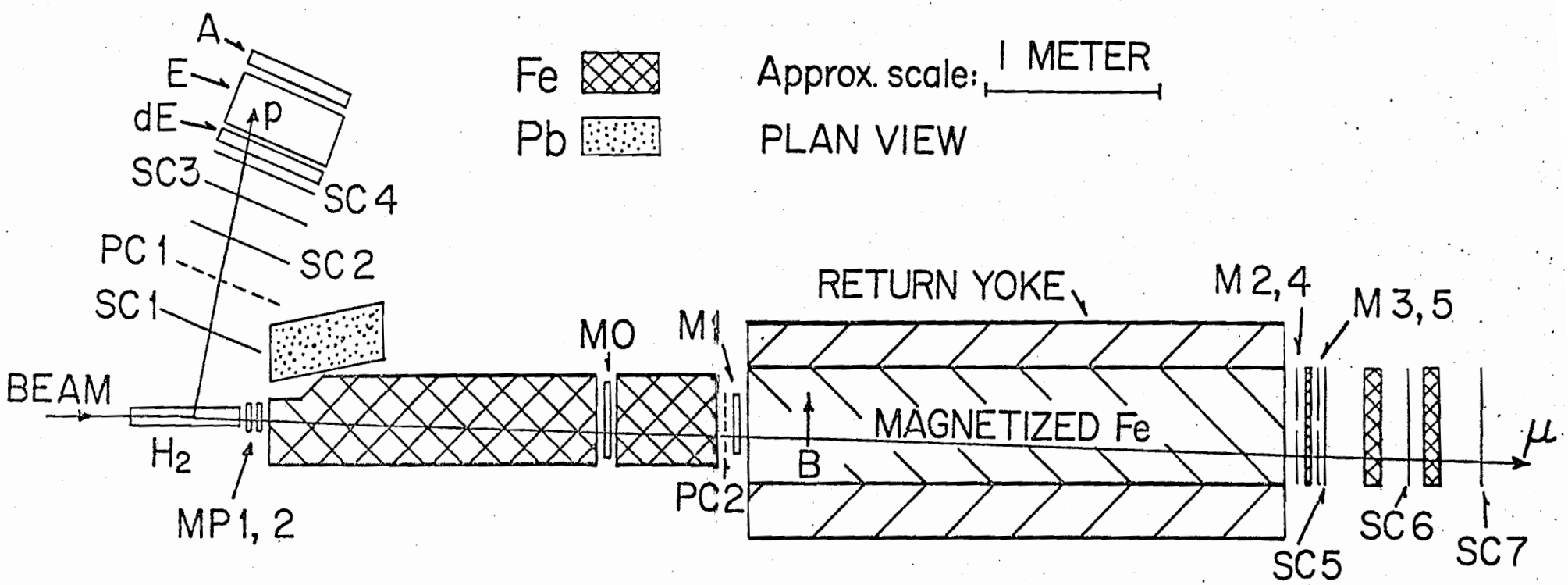
A
E
dE
p
SC3
SC 4
PC 1
SC 2
SC 1
BEAM
H2
MP 1, 2
Fe
Pb
Approx. scale: 1 METER
PLAN VIEW
MO
M1
PC2
RETURN YOKE
M 2,4
M 3,5
MAGNETIZED Fe
B
μ
SC5
SC6
SC7

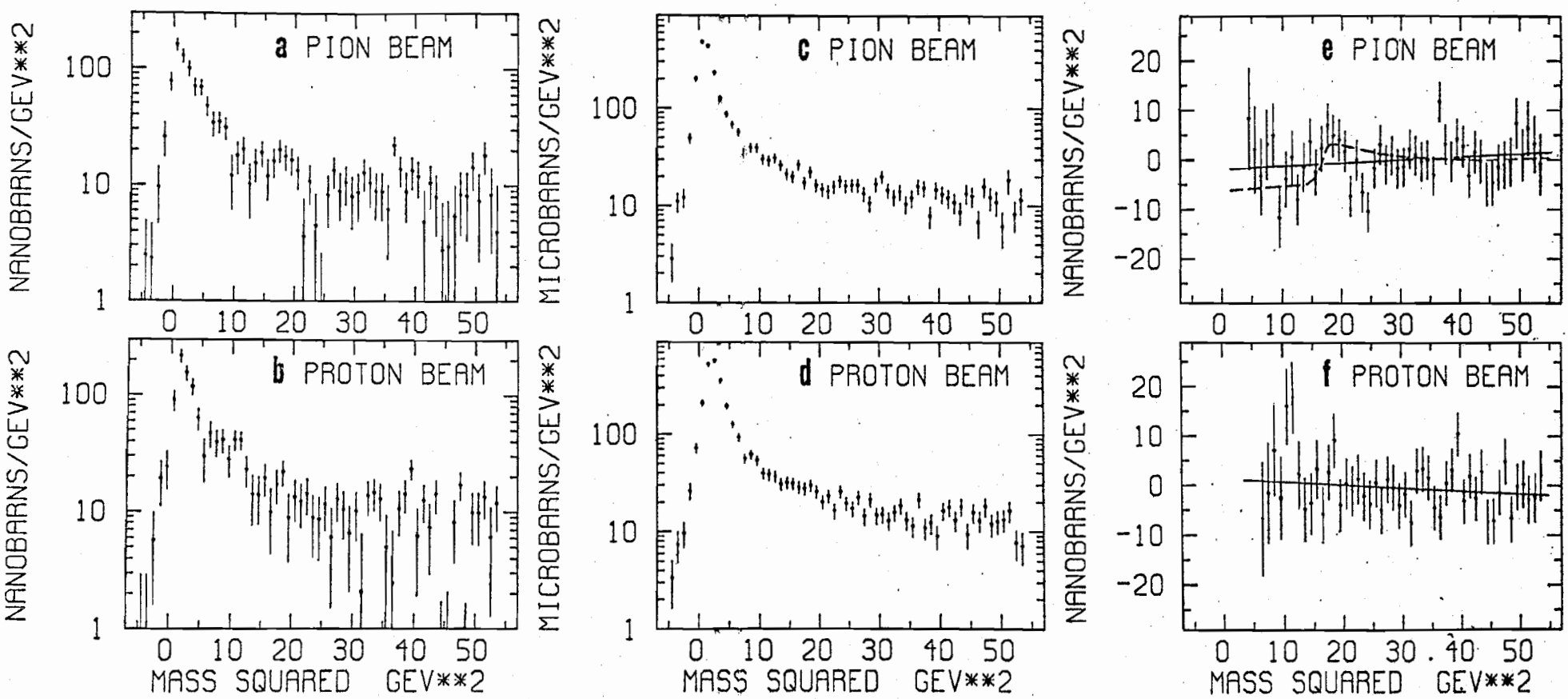
a PION BEAM
b PROTON BEAM
c PION BEAM
d PROTON BEAM
e PION BEAM
f PROTON BEAM
NANOBARNS/GEV**2
MICROBARNS/GEV**2
MASS SQUARED GEV**2
1
10
100
-20
-10
0
10
20
30
40
50