# NEUTRINO AREA

Some of the earliest proposals for experiments received by the Laboratory were to study neutrino interactions. This led to an examination of numerous experimental area designs in order to develop one suitable for these experiments. These studies included detailed examinations of detectors and beams as well as general concepts for the experimental area. From these studies it was possible to layout the desired experimental area, which became known as the Neutrino Area. The Neutrino Area was the first experimental facility to be completed, and started using the proton beam in May, 1972.

The types of physics to be done in the Neutrino Area can be summarized as follows:

Neutrino Physics:

This includes both broad-band and narrow-band energy spectrum neutrino beams for counter and bubble chamber detectors.

Muon Physics:

Because muons accompany the neutrino beams, it was natural to put the first muon detectors in this area.

Hadron Bubble Chamber Physics:

Once it was decided that the Neutrino Area would have a new large bubble chamber for neutrino physics, it was natural to provide it with a charged-particle beam. By the addition of an existing small bubble chamber in this area, one could also obtain a quick "look" at hadron physics at high energies.

In developing the Neutrino Area, the central factor was the neutrino beam itself. A proton beam transport region was necessary to focus the main high intensity proton beam onto a target. The target region required beam monitoring equipment and a focusing system to collect the pions and kaons emitted from the target. There must then be a sufficiently long decay space for a reasonable fraction of the pions and kaons to decay into neutrinos and the accompanying muons. This decay space must be evacuated so that the pions and kaons would decay without disappearing by interaction. After decay the muons must be absorbed or deflected so that only neutrinos enter the experimental apparatus. Approximately 30,000 tons of material are necessary to absorb 400 GeV/c muons arising from the broad band focusing system. The combination of the decay path and absorber leads to an experimental area that is 1.6 km long. A schematic drawing of the Neutrino Area is shown on the next page.

Because of the requirement for different high intensity beams, such as broad band neutrino, narrow band neutrino and muon beams, it was decided to put each target and focusing system on railroad cars. In this way it is possible to change from one system to another or to repair apparatus on the train. Since the targeting apparatus becomes very radioactive, it is necessary to have a special target handling area for servicing trains.

There are three target trains each of which will fit into the 200-foot long, 6-foot diameter target tube. There is also a 200-foot train in Neuhall just ahead of the target tube used for proton beam transport to the target on a train. The three trains are:

FIGURE 1

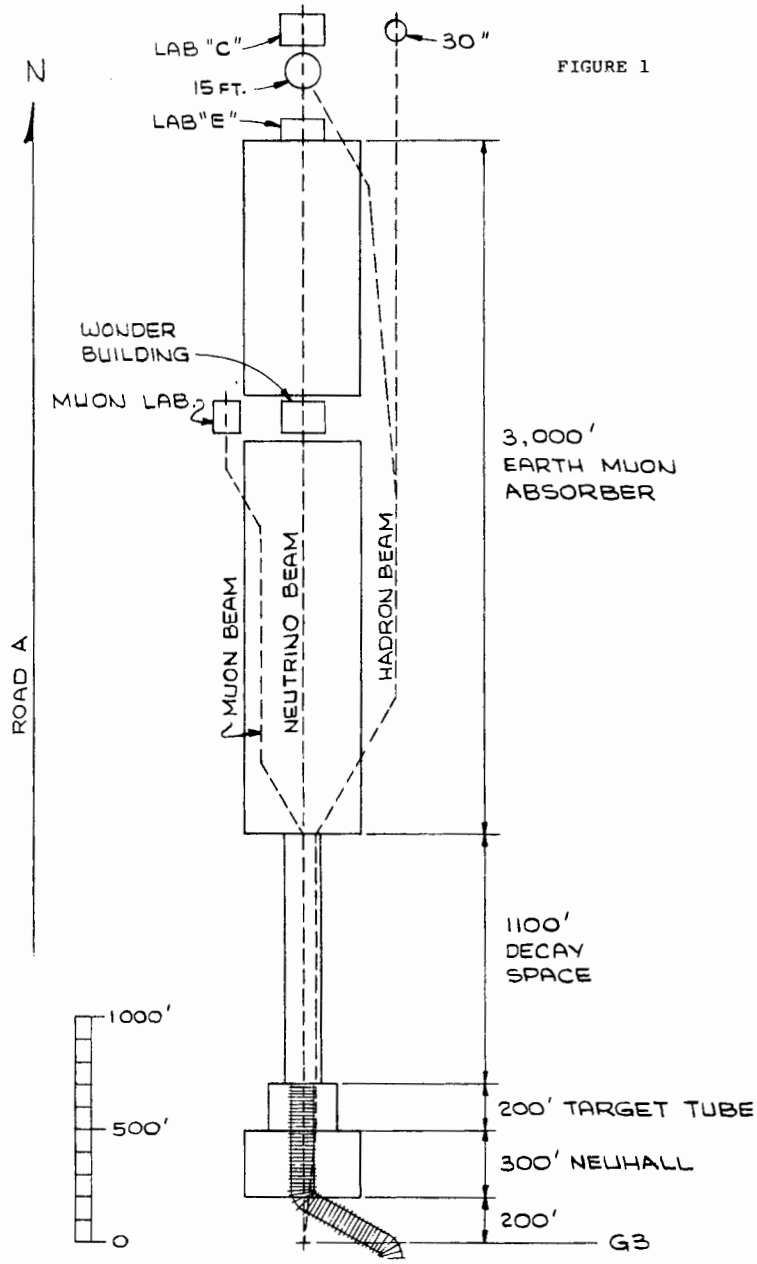


Schematic drawing of the Fermilab Neutrino Area, which lies 3300 feet north of the Central Laboratory Building.

Broad Band Neutrino Train:

This train has special "horn" magnets to focus all pions and kaons of one charge. It was described in the August 1974 NALREP. The train is used for neutrino physics in the 15-foot bubble chamber (Experiments #31, #45A, #155) and for the broad band neutrino counter facility located in Lab C (Experiment #1A).

Narrow Band Neutrino Train:

This train bends and focuses using conventional magnets the produced pions and kaons to form a beam with fixed charge and with a narrow band of momenta. It is used for neutrino experiments E21, E262, and E320 located in the Wonder Building.

Triplet Train:

This train contains a triplet of conventional quadrupole magnets and focuses produced pions and kaons of both signs of charge. It has principally been used for muon experiments E26 and E98, although it has been used for high energy broad band neutrinos (E370).

In conjunction with all of these trains, the hadron beam for the bubble chambers passes beside the neutrino train as shown in the drawing. By various targeting schemes or absorption methods, the hadron beam is used to produce enriched beams of protons, antiprotons, pions or kaons. There is a Cerenkov-proportional wire tagging system for the beams to both the 15-foot and 30-inch bubble chambers (see July 1974 NALREP).

To complete the beam area following the 1100 foot long, 3 foot diameter decay tube, there is a 3000 foot earth muon absorber to remove the unwanted muons and purify the neutrino beam. On the side of the earth filter are many small magnet enclosures. The properties of the Neutrino Area beams are summarized below:

TABLE I

NEUTRINO AREA BEAMS

| BEAM | PARTICLE | YIELD FOR $10^{13}$ INCIDENT PROTONS (300 GeV) |
|---|---|---|
| Broad Band Neutrino | $\nu$ | $3\times10^{10}$ $\nu$ peaked at 15 GeV ~1 interaction/ 30 tons of target |
| | $\bar{\nu}$ | $2\times10^{10}$ $\bar{\nu}$ peaked at 15 GeV ~1 interaction/ 120 tons of target |
| Narrow Band Neutrino | $\nu$ | $4\times10^{8}$ $\nu$ peaked at 40 GeV<br>$3\times10^{7}$ $\nu$ peaked at 105 GeV<br>~1 interaction/900 tons of target |
| | $\bar{\nu}$ | $1.6\times10^{8}$ $\bar{\nu}$ peaked at 40 GeV<br>$7\times10^{6}$ $\bar{\nu}$ peaked at 105 GeV<br>~1 interaction/6,000 tons of target |
| Triplet Train | $\mu$ | $6\times10^{5}$ $\mu^+$ at 150±1.5 GeV<br>$2\times10^{5}$ $\mu^-$ at 150±1.5 GeV<br>halo = 1.0 |
| | $\nu+\frac{2}{3}\bar{\nu}$ | $1.5\times10^{9}$ peaked at 40 GeV<br>~1 interaction/400 tons of target |
| | $\pi$ | $10^{7}$ $\pi^-$ at 150±1.5 GeV into Muon Area |
| Hadron Beam With $\hat{C}$ Tagging | $\pi^-$, p | 25-300 GeV $\Delta p/p$ = .1 - 1.0% |
| | $\pi^+$ | 25-200 GeV |
| | $\bar{p}$ | 50-125 GeV |
| | $K^+$ | Tests in progress |
| | $\pi^+$+p | $5\times10^{5}$ at 150±1.5 GeV |

The Neutrino Department has five detector facilities; counter neutrino experiments are done in Lab C as well as in the Wonder Building, Muon Lab, 30-inch and 15-foot bubble chambers. Nominally two of these five facilities are in operation at any given time. These facilities will not be discussed in detail here, since some of them have been presented in NALREP and the others will be presented in future articles. Figure 2 is a rough sketch of each facility and Table II summarizes the characteristics of each facility. The figures have been drawn to the same relative scale so that comparisons of size can be made.

Two of these facilities will be improved this calendar year. The building containing the counter broad band neutrino facility (Lab C) will be enlarged by a factor of 2 to make space for larger diameter magnets for muon detection and measurement. Also the hadron calorimeter will have lead plates added to increase the target mass and increase the ability to identify electromagnetic showers.

The counter narrow band facility will get a new building designated Lab E to be located ahead of the 15 foot bubble chamber. This will replace the Wonder Building located in the midst of the earth shield. The toroidal magnet will also be replaced with three 12 foot diameter, 8 foot long magnets to give better acceptance for muons.

The possibility of extending the operation of the horn to a pulse of 1 millisecond is being investigated. If this is done then all three neutrino facilities, Lab E, 15 foot bubble chamber, and Lab C, could run simultaneously.

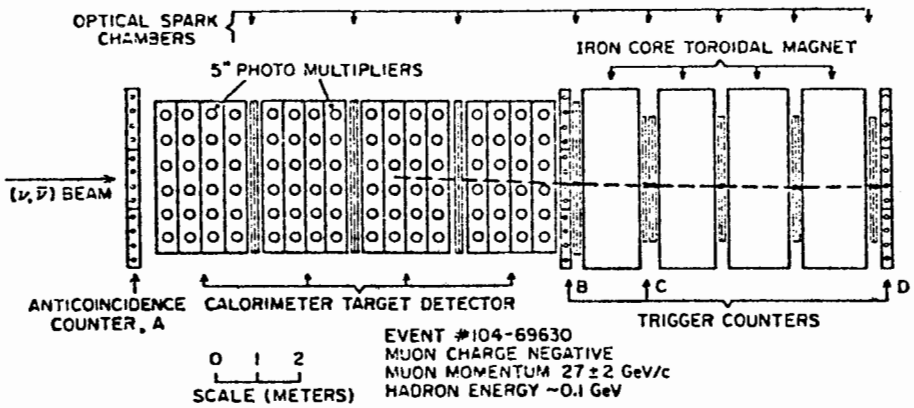


A. Broad Band Neutrino Counter Facility

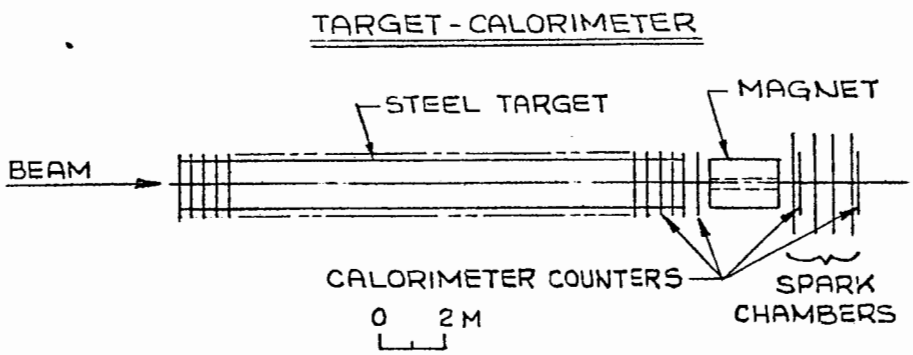


B. Narrow Band Neutrino Counter Facility

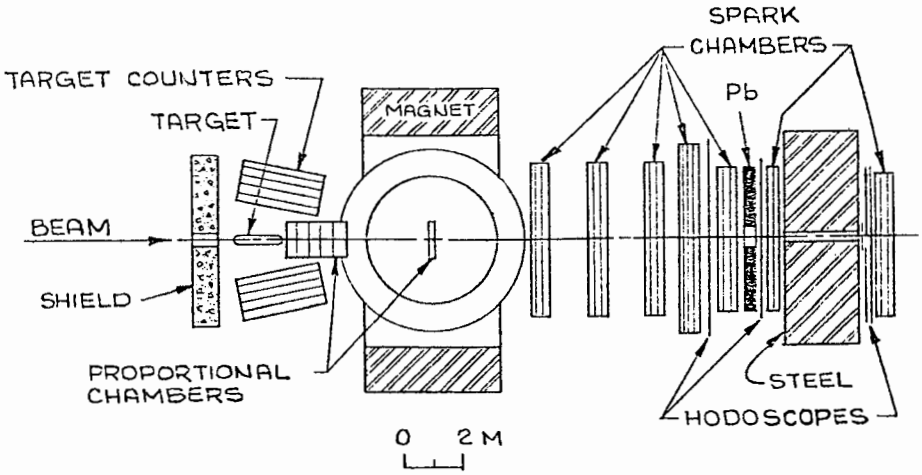


C. Muon Lab Facility

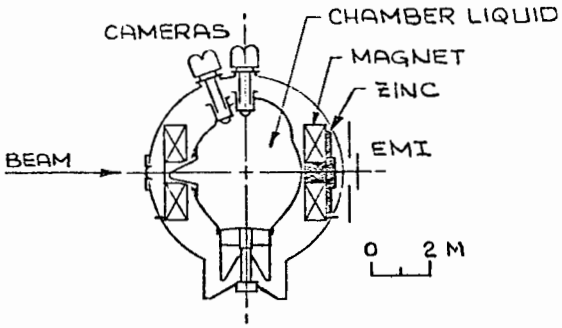


D. 15' Bubble Chamber Facility

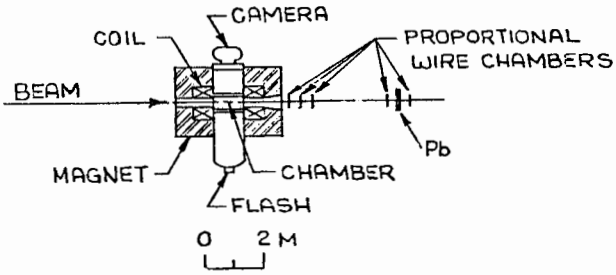


E. 30" Bubble Chamber Hybrid Facility

TABLE II

NEUTRINO DEPARTMENT FACILITIES

| FACILITY | CHARACTERISTICS |
|---|---|
| Counter Broad Band Neutrino (Detector located in Lab C) | Useful Target - 20 tons liquid scintillator<br>Hadron energy ±15% by liquid scintillator<br>Muon identification acceptance see Fig. 3<br>Wide gap spark chambers<br>Toroidal magnets |
| Counter Narrow Band Neutrino (Wonder Bldg.) | Useful Target - 80 tons steel<br>Hadron energy ±20% by steel - scintillator sandwich<br>Muon identification acceptance see Fig. 3<br>Wire chambers<br>Toroidal magnet |
| Muon Lab | Target-Hydrogen, metal, etc.<br>Cyclotron magnet. 15 kG - 4 ft × 12 ft × 12 ft<br>Multiwire proportional chambers around target<br>Magnetostrictive wire chambers downstream of magnet<br>Muon identification (see Fig. 3) |
| 15-ft B.C. | Useful Target - 1 ton hydrogen<br>2 tons deuterium<br>20 tons neon<br>3 meter fiducial length for hadrons<br>Setting ~ 300 μ<br>Muon identification EMI (see December 74 NALREP)<br>Magnetic field 30 kG<br>Tagging system for hadrons<br>2 Cerenkov + 9 wire planes |
| 30-in. B.C. | Useful Target - 0.3 meter $H_2$, $D_2$, neon<br>Setting error 40 μ<br>Magnetic field 25 kG<br>Tagging system for hadrons<br>Cerenkov + 12 wire planes<br>Downstream proportional wire system with 12 planes (see Fig. 1) |

Since the Neutrino Area was the first external experimental area to take beam, it has accumulated extensive operating experience. As of January 1, 1975, there were 41 completed experiments, and 55 remaining approved experiments. During 1974 the accelerator provided beam for 43 weeks. The Neutrino Department used the beam for 39 weeks (with 2 additional weeks for train changes and 2 weeks of down time). The experiments done in the Neutrino Area beams were:

Neutrino and Muon Lines:

| | | |
|---|---|---|
| Experiment 1A | 16 weeks | |
| Experiment 262 | 6 weeks | |
| Experiment 320 | 6 weeks | |
| Counter neutrino | | 28 weeks |
| Experiment 98 | 9 weeks | |
| Experiment 26 | 2 weeks | |
| Counter muon | | 11 weeks |
| | | 39 weeks |

Hadron Beams:

| | | |
|---|---|---|
| 30" hadrons | 19 experiments, $1.115 \times 10^6$ pictures, | 18 weeks |
| 15' hadrons | 3 experiments, 69K pictures, | 4 weeks |
| 15' neutrino | 3 experiments, 108K pictures, | 8 weeks |
| 16 tests or small experiments (emulsions, etc.) | | 9 weeks |
| | | 39 weeks |

The first results from the Neutrino Area came from the 30-inch bubble chamber. Whereas these experiments did not produce new exciting discoveries, they did produce inclusive data for pions, protons, lambdas, antilambdas, neutral kaons, and some resonances; i.e., rho and delta in addition to multiplicity and production data.

The neutrino experiments have given data confirming neutral currents and Experiment E1A has new exciting data on dimuon production. Neutrino Experiment E21 has produced detailed total cross section data. Muon Experiment E26 has published a paper suggesting scaling violations between SLAC and Fermilab energies.

All of the Neutrino Area facilities have produced recent data that should give exciting results during 1975.

Reported by F. Russ Huson