PUB-75-162-E
E-0081

#81

FERMILAB-PUB-75-162-E

# γ-γ Coincidence Spectrometry of High-Energy Nuclear Reaction Targets*

Ø. Scheidemann and N. T. Porile

Department of Chemistry, Purdue University,

West Lafayette, Indiana 47907 USA

The application of Ge(Li) γ-γ coincidence spectrometry to the assay of a uranium foil irradiated by 300 GeV protons is described. Digital gates were set on γ-rays from a number of possible reaction products and coincidence spectra were recorded. The technique was applied to the determination of both cross sections and thick-target recoil properties and results are presented and compared with those obtained by conventional techniques.

* Work supported by the U. S. Atomic Energy Commission

## 1. Introduction

The advent of high-resolution Ge(Li) detectors has led to the development of gross γ-ray spectrometry as a useful technique in the study of high-energy nuclear reactions. Although the spectra of unprocessed targets can contain hundreds of lines, the use of these detectors in conjunction with 4000 channel analyzers coupled with the development of various peak analysis codes has made it possible to obtain much useful information. The technique has thus been applied to the determination of both cross sections and recoil properties and has proved particularly useful in broad survey experiments[1].

Gross γ-ray spectrometry can be most successfully applied in the study of reactions induced in targets of low- or medium-mass. In the case of heavy-element targets, the spectra become so complex due to the presence of many isotopes of all elements up to the target that only limited information can be obtained. We present here an application of γ-γ coincidence spectrometry to the determination of products from high-energy bombardment of heavy elements. This technique gives a highly selective identification of various nuclides in the presence of a vast number of unrelated γ-rays and can provide useful supplementary information to that obtainable in singles measurements.

## 2. Experimental

The γ-γ coincidence measurements were performed with calibrated Ge(Li) detectors having a resolution of 1.8 and 2.0 keV for the 1332 keV γ-ray of $^{60}$Co and a relative efficiency of 6.3% and 11.0%, respectively. The detectors were connected to a conventional fast-slow coincidence circuit having a resolution time of 200 ns. A block diagram of the electronics is shown in Fig. 1.

Signals from the two detectors were processed by 4096 100 mHz ADC's connected to a Northern Scientific analyzer interfaced to a Nova computer and equipped with magnetic tape readout. For each coincident event the pair of digital addresses that satisfied the restrictions of a digital gating program were stored in a buffer memory and transferred to magnetic tape. The gating program could be used to set windows on up to 32 regions of interest in the spectrum from each detector. A particular region consisted of either a single peak or of several peaks that were close in energy. One pair of regions was usually reserved for signals from a pulser used to determine the elapsed live time. The pulse height intervals covered by the 32 gates corresponded to about 40% of the coincidence area and to a substantially smaller fraction of all coincident events. The bulk of the excluded events consisted of photopeak-Compton coincidences, annihilation radiation - $\gamma$ coincidences, events due to various scattering phenomena, etc.

After the completion of a given experiment the coincident spectra were played back and sorted into individual 4096 channel spectra by the gating program. Digital gates were now set on the peaks of interest as well as on adjacent featureless regions of the gating spectra. The latter were used to establish the background due to events other than true photopeak-photopeak coincidences. The effect of accidental coincidences was investigated in a separate series of counts in which the time gate was set outside the prompt peak. In all but one instance the contribution from accidentals was completely negligible.

The above system was used to explore the suitability of this technique for the determination of both cross sections and thick-target recoil properties. A target stack consisting of a 25 μm thick uranium

foil surrounded by several sets of 50 μm thick Mylar foils was exposed to a beam of 300 GeV protons in the meson hall at the Fermi National Accelerator Laboratory. The irradiation time was about 1 hr corresponding to an integrated intensity of $2 \times 10^{15}$ protons.

For a given irradiation the target, forward catcher, and backward catcher were separately assayed. In order to maintain a relatively uniform dead time for all 3 samples only a small piece of the target foil was assayed. It was established by singles measurements that this piece contained 14% of the activity. Each sample was mounted on a planchet and positioned nearly midway between the two detectors. The distance between the faces of the detectors was either 1 or 4 cm. The coincidence measurements commenced about 12 hours after end of bombardment. Each sample was initially assayed for approximately 3 hours and subsequently for ≈12 h. The initial analyzer dead time was ≈20%. On the average, several hundred coincidence counts were obtained for each nuclide of interest during these counting times.

Table 1 lists the nuclides that were unambiguously identified in all three foils. Listed for each nuclide are the half-life, the energies of the coincident γ-rays, the percentage abundance of the cascade,[2)] and the γ-γ detection efficiency. Digital gates were also set on γ-rays emitted in the decay of $^{48}Cr$, $^{52}Mn$, $^{55}Co$, $^{56}Ni$, $^{91}Sr$, $^{96}Tc$, and $^{111}In$ but the presence of these nuclides could not be unambiguously established. This was due to either a combination of low cross section, branching ratio and efficiency, interference of other γ-rays in the coincident spectra, or a large contribution from accidental coincidences. Several typical coincidence spectra are shown in Fig. 2. These are the γ-rays emitted by $^{24}Na$ and $^{43}K$ in both target and forward catcher samples.

For each nuclide we show the regions of interest obtained by gating on each of the coincident γ-rays. The results of the off-peak gated spectra are also shown. It is seen that good quality peaks are generally obtained and that the off-peak background is quite small.

## 3. Results

The results are summarized in table 2, which lists the cross sections, thick-target ranges, and forward-to-backward emission ratios. The results are based on 1-4 assays for each nuclide. The quoted uncertainites are chiefly due to counting statistics. The cross sections are based on the determination of $^{7}Be$ in a Mylar ($C_{10}H_8O_4$) monitor foil. The cross sections for the $^{12}C(p,x)^{7}Be$ and $^{16}O(p,x)^{7}Be$ reactions were assumed to be 9.2mb at 300 GeV[3]. The cross section values do not include any correction for possible angular correlations between the coincident γ-rays. Since the detectors subtended a fairly large solid angle we expect this effect to be small compared to the statistical uncertainty.

Whenever results are obtained by the use of a new technique it is desirable to compare them, if possible, with similar data obtained by a more conventional approach. Some of the cross sections and recoil properties listed in table 2 have been previously determined at 300 GeV by use of one of the more usual techniques. The previous data[4-7] are summarized in the table. Most of the results agree within the limits of error indicating that reliable data can be obtained from γ-γ coincidence spectrometry.

The results presented in table 2 do not indicate the limits of the technique but are merely the result of one experiment. We were particularly

interested in nuclides having $A<100$ and did not make a systematic attempt to look for heavier products. We also made no attempt to detect nuclides having half-lives shorter than ≈9 hours and the integrated beam intensity was too low to permit the determination of nuclides with half-lives longer than a few days. It would thus appear possible to design experiments yielding substantially more information than is reported here. Furthermore, the use of improved electronics should make it possible to process a larger total number of $\gamma$-rays and thereby decrease the statistical uncertainty in the data as well as make nuclides with lower production cross sections accessible to measurement.

We wish to thank Dr. M. W. Weisfield and the FNAL staff for their help with the irradiation.

## References

1. G. English, N. T. Porile and E. P. Steinberg, Phys. Rev. C10 (1974) 2268. This article contains a list of references to previous work.

2. C. M. Lederer, J. M. Hollander and I. Perlman, Table of Isotopes 6th Ed., J. Wiley, New York 1967; Nuclear Data Group, Nuclear Level Schemes, . Academic Press, New York, 1973.

3. R. Silberberg and C. H. Tsao, Naval Research Laboratory Report NRL7593, 1973 (unpublished).

4. S. B. Kaufman and M. W. Weisfield, Phys. Rev. C11 (1975) 1258.

5. Ø. Scheidemann and N. T. Porile, to be published.

6. Y. W. Yu, S. Biswas and N. T. Porile, Phys. Rev. C (in press).

7. Y. W. Yu and N. T. Porile, Phys. Rev. C10 (1974) 167.

Table 1

Decay properties of observed nuclides

| Nuclide | Half-life | $E_{\gamma 1}$ (keV) | $E_{\gamma 2}$ (keV) | γ-γ branching ratio (%) | γ-γ detection efficiency x $10^{-4}$ (per cascade) |
|---|---|---|---|---|---|
| $^{24}Na$ | 15.02 h | 1369 | 2754 | 100 | 0.16 |
| $^{28}Mg$ | 21.03 h | 401 | 941 | 36 | 1.93 |
| $^{43}K$ | 22.4 h | 373 | 617 | 81 | 3.29 |
| $^{48}Sc$ | 1.82 d | 983 | 1037 | 98 | 0.65 |
| $^{77}Ge$ | 11.3 h | 211 | 265 | 30.6 | 15.3 |
| | | 216 | 416 | 22.0 | 9.17 |
| $^{86}Y$ | 14.6 h | 777 | 1077 | 22.4 | 0.80 |
| $^{90}Nb$ | 14.6 h | 141 | 1129 | 82 | 4.90 |
| $^{96}Nb$ | 23.35 h | 569 | 1091 | 49.2 | 1.12 |
| | | 778 | 460 | 26.3 | 2.03 |
| | | 778 | 569 | 49.2 | 1.60 |
| | | 778 | 1091 | 49.5 | 0.79 |
| $^{128}Sb$ | 9.3 h | 314 | 743 | 61 | 3.25 |
| | | 314 | 754 | 61 | 3.20 |
| | | 743 | 754 | 100 | 1.25 |
| $^{130}I$ | 12.5 h | 536 | 668 | 100 | 2.02 |
| $^{132}Te$ a) | 78 h | 673 | 775 | 82 | 1.35 |
| $^{140}La$ | 40 h | 487 | 1596 | 46.5 | 0.88 |
| | | 816 | 1596 | 24.0 | 0.50 |

a. Cascade in $^{132}I$ decay

Table 2

Cross sections and thick target recoil properties obtained by γ-γ assay of $^{238}U$ bombarded by 300 GeV protons

| Nuclide | σ(mb) | Range ($mg/cm^2$ U) | F/B |
|---|---|---|---|
| $^{24}Na$ | 17.0±1.6 (1)[a] | 14.88±1.24 (2) | 1.38±0.12 (2) |
| | | 12.8 ±0.4 (ref 4) | 1.33± .03 (ref 4) |
| $^{28}Mg$ | 7.0±0.6 (1) | 15.66±1.05 (2) | 1.37±0.09 (2) |
| | | 14.4 ±0.5 (ref 4) | 1.29± .04 (ref 4) |
| $^{43}K$ | 5.2±0.3 (2) | 10.60±0.38 (4) | 1.05±0.03 (4) |
| $^{48}Sc$ | 3.1±0.3 (1) | 9.36±0.94 (1) | 1.14±0.14 (1) |
| | 3.3±0.1 (ref 6) | 9.5 ±0.1 (ref 5) | 1.03±0.02 (ref 5) |
| $^{77}Ge$ | 1.33±0.13 (2) | 13.34±0.90 (4) | 1.13±0.07 (4) |
| $^{86}Y$ | 5.1±1.2 (1) | 6.02±1.66 (1) | 0.86±0.23 (1) |
| $^{90}Nb$ | 1.90±0.16 (1) | 6.61±0.49 (1) | 1.01±0.08 (1) |
| $^{96}Nb$ | 5.5± 0.2 (4) | 10.08±0.47 (4) | 1.11±0.08 (4) |
| $^{128}Sb$ | 1.4± 0.3 (1) | 10.26±0.83 (5) | 0.96±0.09 (7) |
| $^{130}I$ | 2.1± 0.2 (2) | 9.33±0.85 (3) | 1.01±0.08 (3) |
| | 1.14± .07 (ref 7 ) | 7.6 ± .14 (ref 7) | 1.14± .07 (ref 7) |
| $^{140}La$ | 2.7± 0.3 (2) | 8.08±0.91 (2) | 0.83±0.13 (2) |
| $^{132}Te$ | 4.7± 0.4 (1) | 10.98±0.81 (1) | 1.06±0.08 (1) |

a Number of determinations

## Figures

Figure 1. Block diagram of electronics. LA - linear amplifier, SCA - single channel analyzer, TPC, time to pulse-height converter, PS - pulse stretcher, PG - pulse generator. The ORTEC model numbers are indicated.

Figure 2. $\gamma$-$\gamma$ coincidence spectra of $^{24}$Na and $^{43}$K from target and forward catcher foils. The following are, respectively, the nuclide, foil, displayed $\gamma$-ray (keV), and gating $\gamma$-ray (keV) for each spectrum: a. $^{43}$K, catcher, 373, 619; b. $^{43}$K, catcher, 619, 373; c. $^{24}$Na, catcher, 1368, 2754; d. $^{24}$Na, catcher, 2754, 1368; e. $^{43}$K, target, 373, 619; f. $^{43}$K, target, 619, 373; g. $^{24}$Na, target, 1368, 2754; h. $^{24}$Na, target, 2754, 1368. Symbols: + - peak gate, o - off-peak gate, x - both gates.

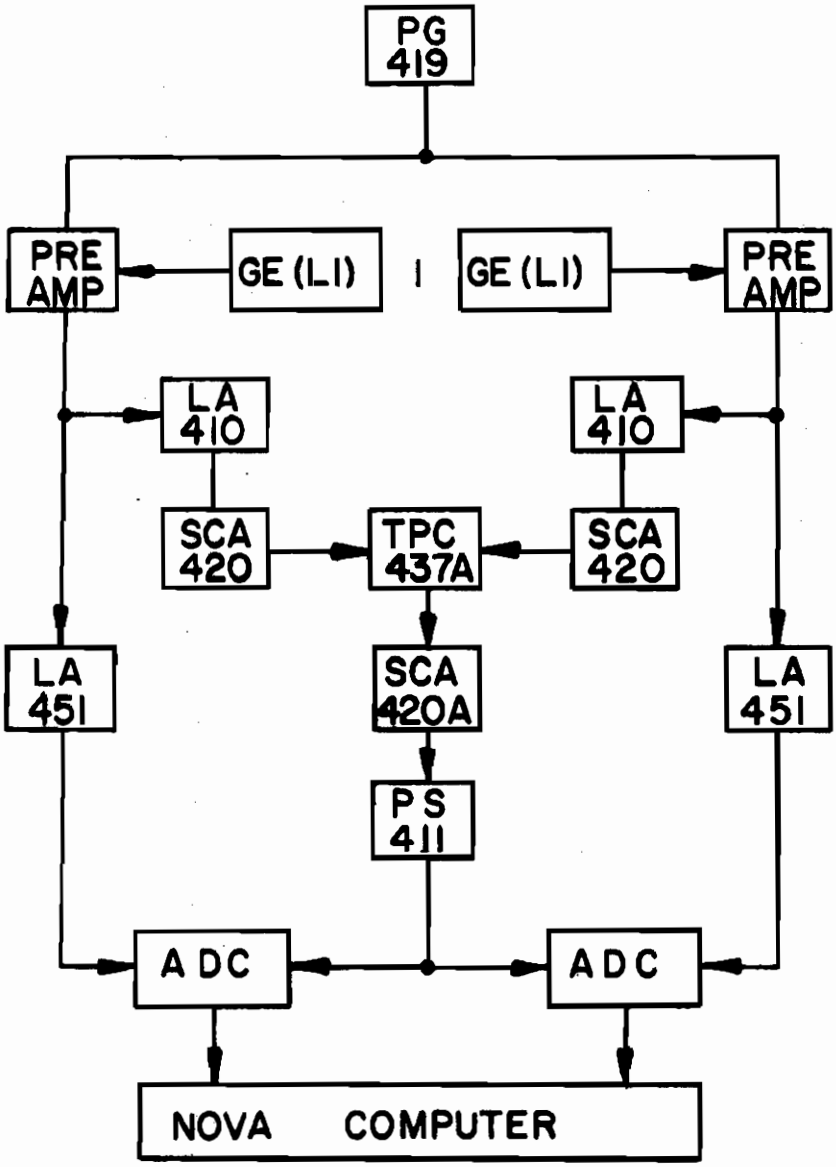
PG
419
PRE
AMP
GE (LI)
GE (LI)
PRE
AMP
LA
410
LA
410
SCA
420
TPC
437A
SCA
420
LA
451
SCA
420A
LA
451
PS
411
ADC
ADC
NOVA COMPUTER

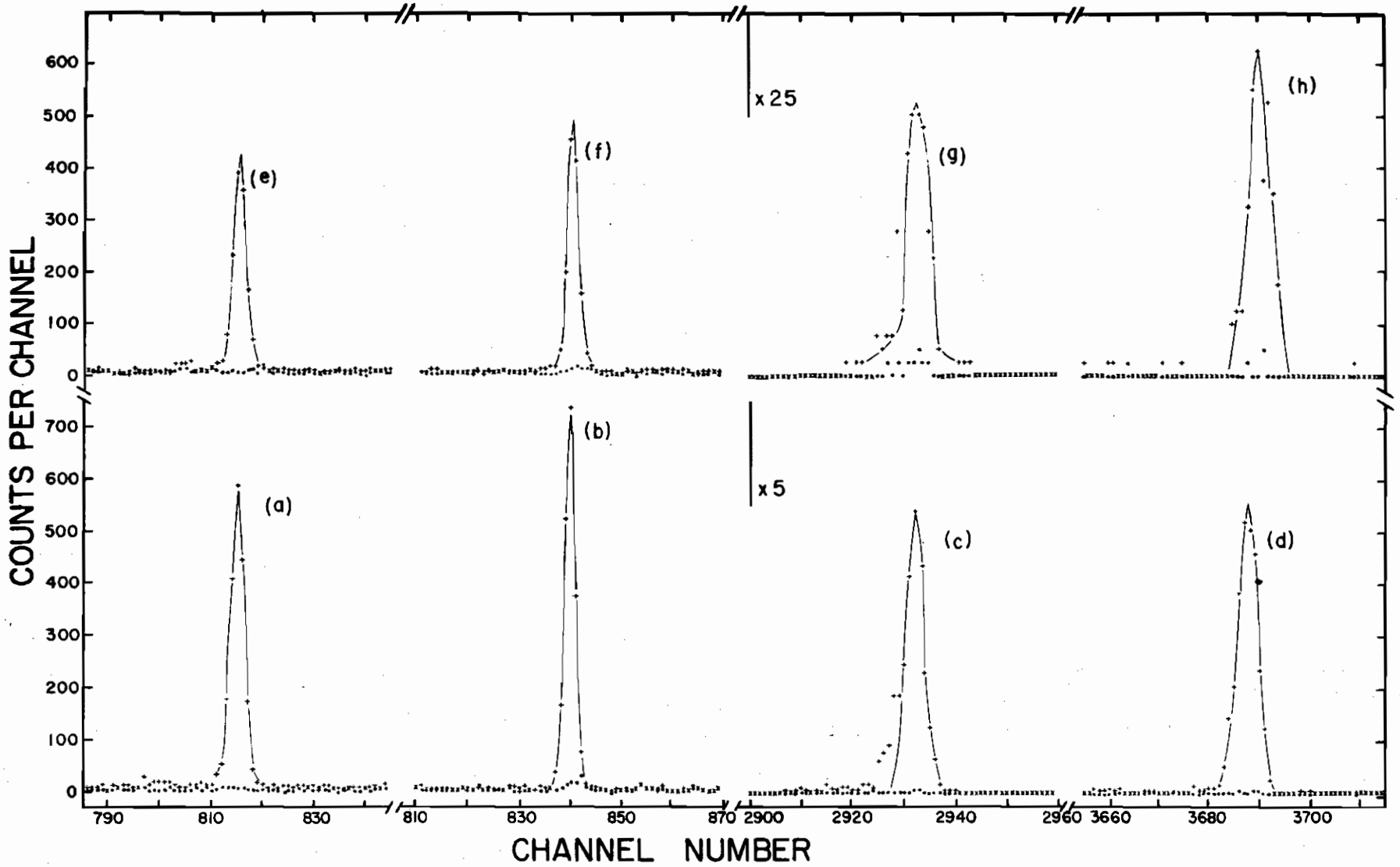
COUNTS PER CHANNEL
CHANNEL NUMBER
(a)
(b)
(c)
(d)
(e)
(f)
(g)
(h)
x 5
x 25
0
100
200
300
400
500
600
700
790
810
830
850
870
2900
2920
2940
2960
3660
3680
3700