E163

ORO-3065-33

FERMILAB-PUB-75-117-E

DIRECT ELECTRON-POSITRON PAIR PRODUCTION BY 200 GeV NEGATIVE PIONS+

L. R. Fortney, A. T. Goshaw, J. W. Lamsa, J. S. Loos,
D. A. Niemi, W. J. Robertson, and W. D. Walker
Physics Department, Duke University
Durham, North Carolina 27706

We have studied direct electron-positron pair production by the collision of 200 GeV π^- mesons with a neon target. The data consist of 622 direct pairs with momenta ranging from 10 MeV/c to 7.5 GeV/c. We have measured the total production rate to an accuracy of 10 per cent and studied the relevant momentum and electron-positron momentum partition spectra. In contrast to several recent experiments, we find excellent agreement with the predictions of quantum electrodynamic calculations.

+Supported in part by the Atomic Energy Commission, Contract No. AT-(40-1)-3065.

Direct electron-positron pair production arises from the electromagnetic interaction of a charged particle with the Coulomb field of a nucleus. In principle, this process can be well calculated from quantum electrodynamics and about thirty theoretical papers have been devoted to this subject over the past forty years.[1,2,3] This large number of calculations attests to the fact that the technical application of QED to direct pair production is complicated. In addition to straight computational details, other considerations enter such as the effects of nuclear and atomic form factors[1] and the influence of medium-dependent multiple scattering[2] which is known to suppress the soft component of bremsstrahlung.[4] The latest calculations agree fairly well, however, and prove to be relatively insensitive to model dependent details.[3] A theoretical prediction accurate to approximately 10 per cent should be possible over a large direct pair momentum range.

This expectation has been brought into some doubt recently by the results of four experiments which report large discrepancies (factors of from 2 to 10) between QED calculations and measured direct pair production rates. These experiments were done with nuclear emulsions and used beams of 16 and 150 GeV/c μ^- mesons[5] and 200 GeV/c protons.[6] Earlier experimental studies of direct pair production by π^- mesons have come to conflicting conclusions about their agreement with theory.[7]

In this paper we present the results of a new measurement of direct pair production which has small systematic errors and twice the total

number of events acquired in all previous experiments with mono-energetic particle beams. The data were obtained using the Fermi Laboratory's 30-inch bubble chamber filled with a hydrogen-neon mixture having a density of 0.255 g/cm^3 with 30.9 molar per cent neon content. A total of 50,000 photographs were taken with an incident 200 GeV negative pion beam.

Direct pair production is very evident in this experiment with one event occurring about every 40 photographs. A typical event has an undeflected π^- beam track with the electron and positron produced very forward and spiraling in the 25 kG magnetic field. Over 90 per cent of the direct pairs produced in the momentum range from 10 to 1000 MeV/c have this very characteristic signature. Our scanning criteria were, however, more general to allow for unexpected production features and to extend the detected direct pair momentum as high as possible. We recorded all three pronged events with an undeflected beam track and two minimum ionizing tracks in the momentum range from about 1 to 5000 MeV/c. In addition, any electron-positron pairs from gamma rays converting near a beam track were recorded for the purpose of evaluating the background caused by the unresolved superposition of these pairs with beam tracks. The scanning was done with a magnification of about 1.4 x lifesize and a photograph was rejected if any track other than beam tracks entered the scanning fiducial volume. This procedure resulted in the acceptance of 27,550 photographs and provided a total π^- track length of 4.01×10^6 cm useful for

direct pair production in a fiducial volume 41 cm long.

Scanning efficiency studies were made as a function of the $e^{\pm}$ momenta, p_+ and p_-, the direct pair momentum $k = p_+ + p_-$ and the momentum partition $\mu = (p_+ - p_-)/(p_+ + p_-)$. Only the following simple cuts were found to be necessary:

$$2 < p_{\pm} < 5000 \text{ MeV/c}$$

$$10 < k < 10,000 \text{ MeV/c} \quad .$$

Within this kinematic region the average single scan efficiency was (91.1 ± 1.4) per cent as determined by doubly scanning 30 per cent of the film. The scanning efficiency varies with direct pair momentum as shown in Fig. 1.

Contamination of the sample of direct pairs from all background sources is small and amounts to a total of (3.0 ± 1.0) per cent when averaged over direct pair momenta. The main source of background is from gamma ray pairs, converting very close to the beam track, which come from both bremsstrahlung of the π^- beam and from the forward production of π^0's. We measured this background from the distribution of the transverse distance between the beam track and converted gamma ray pairs that were collected in scanning for this purpose. Extrapolating this distribution to small transverse distances provided a measurement of the unresolved pairs occurring < 0.3 mm from the beam. All other backgrounds were found to be negligible except for a small contribution from hadron production for

direct pairs with momentum from 1 to 10 GeV/c. In this momentum range, events were accepted as direct pairs if their opening angle was less than 2°. This reduced the contamination from hadron production to less than 5 per cent.[8] The total background from all known sources is shown as a function of momentum in Fig. 1.

The momenta of the electron and positron were calculated from measurements made directly on the scan table. This procedure minimizes systematic errors at little expense to measurement precision. The results of the curvature measurements were converted to momentum and corrected properly for ionization and bremsstrahlung losses. The average direct pair momentum error is 8 per cent and does not vary much with momentum.

Our final sample of data consists of 622 events which represent 652 ± 31 direct pairs after all corrections. The momentum spectrum from 10 MeV/c to 10 GeV/c is shown in Fig. 2. The other differential distribution of interest is that for the energy partition μ. Figure 3 shows this folded about zero and plotted separately for direct pairs in three momentum ranges. The errors quoted include all experimental uncertainties except for an overall normalization error of 8 per cent caused mainly by an uncertainty in the density of neon in the target.

A comparison of the data to theory involves numerous considerations that can be only briefly outlined here. Figure 4 shows the Feynman diagrams for the two lowest order amplitudes contributing to direct pair production. The bremsstrahlung-like process a) contains not only a Coulomb

interaction with the nucleus but also a nuclear diffractive part. Process b) is purely electromagnetic. In addition, when dealing with a condensed medium, it is possible that the coherence length of the process is long enough that multiple scattering effects from several atoms can become important. We have used calculations by Ternovskii[1,2] to examine all these effects and find that only process b), with no multiple scattering, is important in the momentum range of this experiment. The result of Ternovskii's calculation[1] is shown by the solid curves in Figs. 2 and 3. Table I shows a statistically more precise comparison of our data to this calculation by presenting the cross section integrated over various momentum ranges. The theoretical prediction[9] is an absolute one with no free parameters[10] and is in excellent agreement with all aspects of our data.

In summary, our measurement of direct pair production by 200 GeV π^- mesons agrees with the QED prediction to an accuracy of about 10 per cent. At this level theoretical uncertainties of a comparable magnitude enter. It would have been unexpected to find any discrepancy in QED in the kinematic domain studied in this experiment, but our verification of technically complicated calculations is important. We note that the theory predicts that direct pair production has no significant projectile spin dependence in the momentum range studied in all experiments done to date. Therefore we conclude that our measurement is in disagreement with the results obtained in recent emulsion experiments using μ^- meson[5] and proton beams.[6]

We would like to thank Lawrence E. Evans for many useful discussions of the theory of direct pair production. It is also a pleasure to acknowledge the assistance of L. Voyvodic, R. Walker and the 30-inch bubble chamber staff at FNAL.

REFERENCES

[1] F. F. Ternovskii, Sov. Phys. - JETP 37, 565 (1960).

[2] F. F. Ternovskii, Sov. Phys. - JETP 37, 718 (1960).

[3] For an extensive reference list and a review of theoretical calculations of direct pair production see A. G. Wright, J. Phys. A Math. Nucl. Gen. 6, 79 (1973).

[4] M. L. Ter-Mikaelian, "High-Energy Electromagnetic Processes in Condensed Media" (Wiley-Interscience, 1972).

[5] P. L. Jain, M. Kazuno, and B. Girard, Phys. Rev. Letters 32, 1460 (1974), and SUNY at Buffalo Preprint (Dec. 1974).

[6] P. L. Jain, M. Kazuno, B. Girard, and Z. Ahmad, Phys. Rev. Letters 32, 797 (1974); J. E. Butt and D. T. King, Phys. Rev. Letters 31, 904(1973).

[7] J. Böhm, A. Mátlová, J. Žáček, and V. G. Grishin, Nucl. Phys. B32, 632 (1971); Robert L. Kinzer and James R. Burwell, Phys. Rev. Letters 20, 1050 (1968) and references therein.

[8] This was estimated from a study of the opening angle distribution between the positive and negative tracks. Direct pair production has a sharp peak at zero degrees while hadron production (with both tracks having momentum less than 5 GeV/c) occurs predominately at large angles.

[9] This ignores direct pair production from atomic electrons. We know of no calculation that properly takes this into account, but, guided by calculations done for gamma ray pair production, we estimate that this would increase the theoretical prediction by about 10 per cent.

[10] Although there are no free parameters, Ternovskii's calculation does incorporate some model dependent features such as using the Thomas-Fermi model to estimate the effect of electron shielding.

Table I. A summary of the direct pair production rates measured in this experiment. The theoretical prediction is from Ternovskii's calculation with our experimental cuts included.

Direct pair momentum range (MeV/c)	Production Rates (events/cm)	
	Measurement[+]	Theory
10 to 10^2	$(8.24 \pm 0.59) \times 10^{-5}$	8.10×10^{-5}
10^2 to 10^3	$(6.98 \pm 0.46) \times 10^{-5}$	6.58×10^{-5}
10^3 to 10^4	$(1.04 \pm 0.16) \times 10^{-5}$	0.93×10^{-5}
10 to 10^4	$(1.63 \pm 0.08) \times 10^{-4}$	1.56×10^{-4}

[+] Errors do not include a systematic normalization error of 8 per cent.

FIGURE CAPTIONS

Fig. 1. Experimental corrections applied to the data as a function of direct pair momentum. The solid circles show the single scan efficiency and the open circles the total background subtraction.

Fig. 2. The direct pair differential production rate versus momentum. This shows the number of direct pairs produced in a given momentum interval (horizontal bars) for 1 cm of 200 GeV π^- track length in our hydrogen-neon mixture (about 95 per cent of the production is from neon). The curve is the theoretical prediction as calculated by Ternovskii. Our experimental cuts on the electron and positron momenta have been properly included. These produce the sharp break in the curve occurring at 5 GeV/c.

Fig. 3. The electron-positron momentum partition in three direct pair momentum ranges. Here we have plotted $|p_+ - p_-| / (p_+ + p_-)$. The solid curve is calculated as described in Fig. 2.

Fig. 4. Feynman diagrams representing the basic electromagnetic contributions to direct pair production.

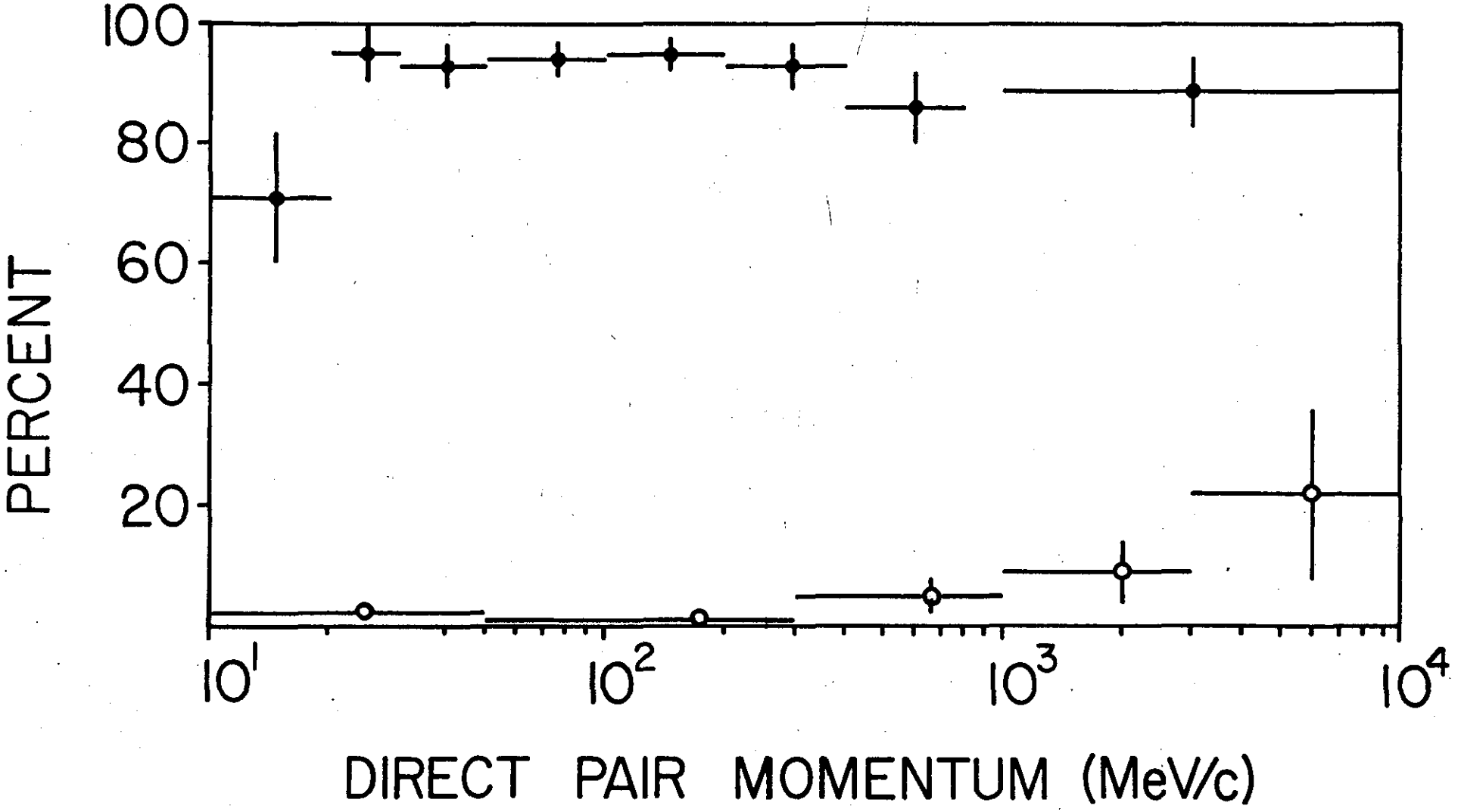
100
80
60
40
20
PERCENT
10^1
10^2
10^3
10^4
DIRECT PAIR MOMENTUM (MeV/c)

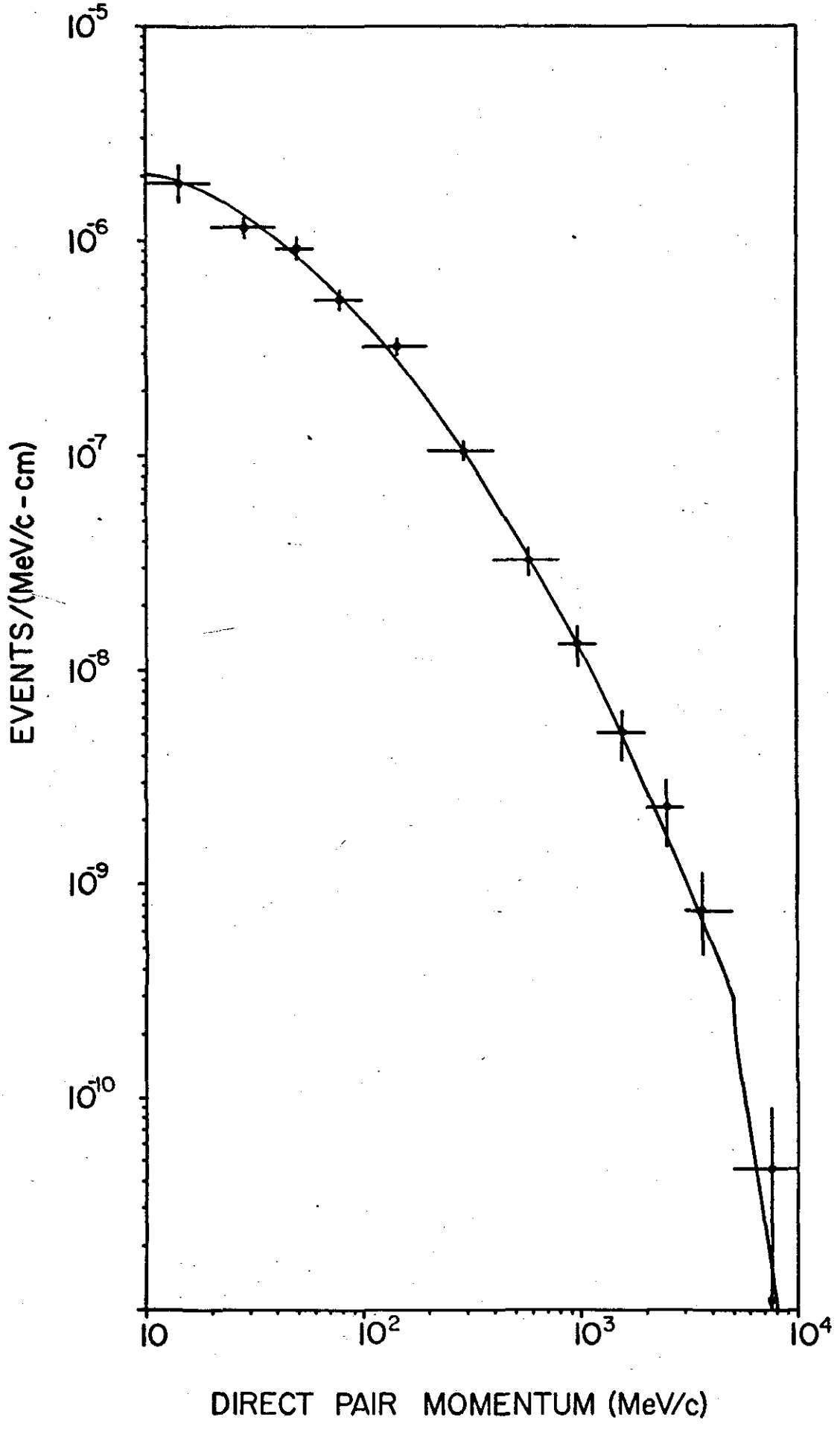
10^{-5}
10^{-6}
10^{-7}
10^{-8}
10^{-9}
10^{-10}
EVENTS/(MeV/c - cm)
10
10^2
10^3
10^4
DIRECT PAIR MOMENTUM (MeV/c)

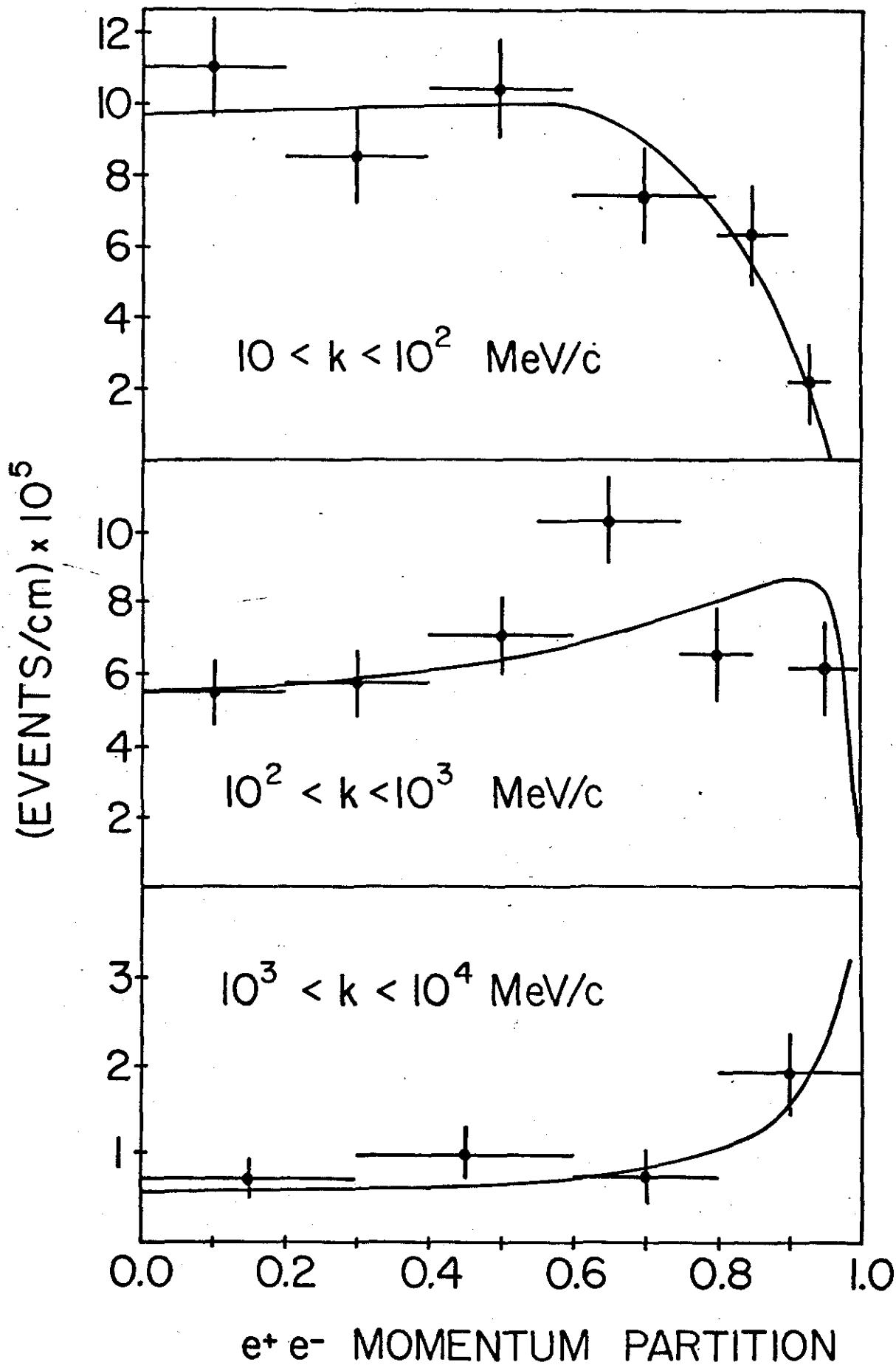
12
10
8
6
4
2
10 < k < 10^2 MeV/c
10
8
6
4
2
10^2 < k < 10^3 MeV/c
3
2
1
10^3 < k < 10^4 MeV/c
(EVENTS/cm) x 10^5
0.0
0.2
0.4
0.6
0.8
1.0
e+ e- MOMENTUM PARTITION

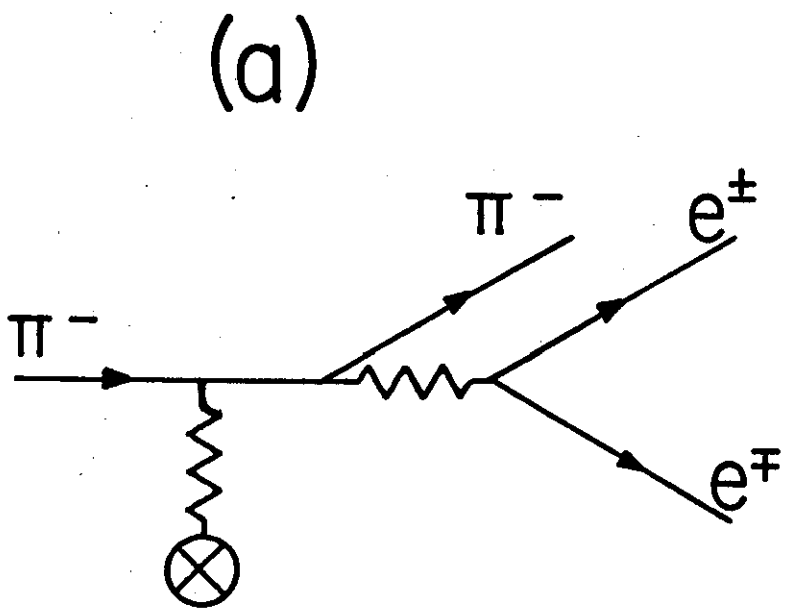
(a)
π⁻
π⁻
e±
e∓

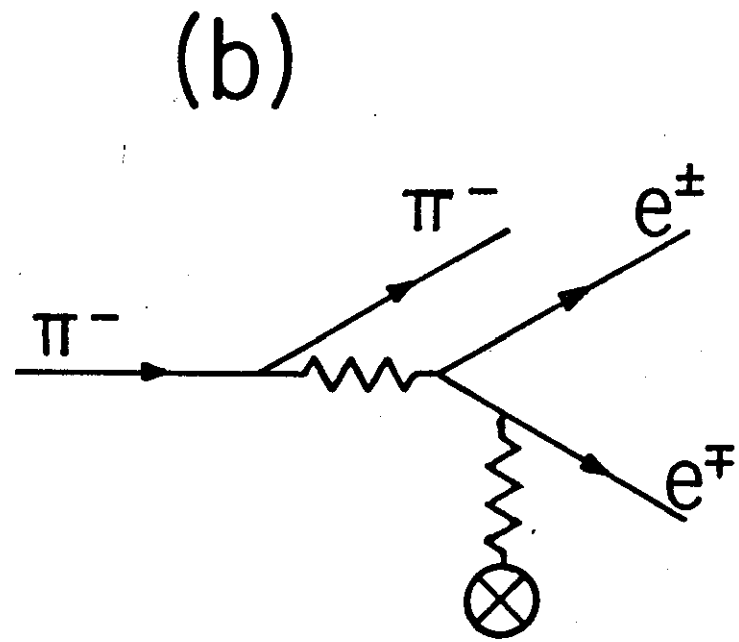
(b)
π⁻
π⁻
e±
e∓