FERMILAB-PUB-74-128-E E 199

# SEARCH FOR MASSIVE LONG LIVED PARTICLES IN ALUMINUM TARGETS IRRADIATED BY 300 BeV and 400 BeV PROTONS

S. Frankel, W. Frati, L. Resvanis,
and W. Yang
Department of Physics, University of
Pennsylvania, Philadelphia, Pa. 19174
and
F. Nezrick
National Accelerator Laboratory
Batavia, Ill. 60510

UPR 0012E 9/11/73

# SEARCH FOR MASSIVE LONG LIVED PARTICLES IN ALUMINUM TARGETS IRRADIATED BY 300 BeV and 400 BeV PROTONS†

S. Frankel, W. Frati, L. Resvanis, and W. Yang
Department of Physics, University of Pennsylvania
Philadelphia, Pa. 19174
and
F. Nezrick
National Accelerator Laboratory
Batavia, Ill. 60510

## ABSTRACT

We have used a directional gas Cherenkov counter, which employed six phototubes to sample Cherenkov light from single particles having a gamma greater than ~10, to achieve accidental rates of less than one per day if operated near targets with surface radiation levels of as high as $10^{+3}$ r/hr. The cosmic ray background measured by our apparatus was reduced to less than one per day by mounting our directional Cherenkov counter above the irradiated targets and facing toward the earth. Two searches of a few days duration, after bombardments at energies of 300 BeV and 400 BeV with > $10^{16}$ protons at NAL, were made in four inch thick targets of aluminum, mounted just down stream from another aluminum target. No long lived particles were observed with cross sections for production and capture of approximately less than a micro-micro barn in a lifetime range of a few to a few thousand hours.

---

†Supported in part by the U.S. Atomic Energy Commission.

# I. INTRODUCTION

Whenever a new energy range is opened up for experimental investigation by the design and construction of a new high energy accelerator it is of interest to carry out searches for new and unpredicted particles. This paper describes the negative results of a search for new massive long lived particles produced in thick aluminum targets by 300 BeV and 400 BeV protons at the National Accelerator Laboratory.

Unlike the antiproton (and the postulated but unobserved particles such as the quark, magnetic monopole, and intermediate vector boson) strange particles were unpredicted particles. Had they not possessed the new strangeness quantum number they would have decayed via the strong interaction with extremely short lifetimes and have been exceedingly difficult to detect. On the other hand, had strangeness been rigorously conserved, these new particles would have been stable. Forbidden to decay electromagnetically, but as it turned out not forbidden to decay via the weak interaction, these particles, violating strangeness in their decay, turned out to have lifetimes of the same order of magnitude as previously observed strangeness conserving weak decays.

There is no reason to believe that the creation of new particles possessing new quantum numbers, and decaying by the violation of some new symmetry will recur at higher energies, but it was this hope that prompted the search for long lived particles described in this note. ( Such a phenomenon might in fact account for the non-observation of magnetic monopoles. If magnetic monopoles were too massive to be produced at accelerator energies they could still be produced at cosmic ray energies in undisturbed moon rocks. Over the long life of the moon appreciable numbers of monopoles could have been produced even in the small cosmic ray fluxes. If, however, the magnetic monopole decayed, violating monopole charge conservation, one could not predict its lifetime. However, the probability of observing magnetic monopoles in moon rocks would then be reduced by the ratio of the decay lifetime of the monopole to the age of the moon. This might be an exceedingly small number).

Because of the small probability of finding new and unpredicted particles this experiment was designed to adhere to certain constraints: that it be carried out with little cost and effort, with available equipment, and that it be parasitic in nature.

The basic purpose of the experiment was to search for the decay of massive particles of long half-life. Our aim was to achieve a sensitivity of a few decays per day in the presence of cosmic ray background and in the presence of the high levels of radioactivity expected in targets irradiated with $\geq$ 300 BeV protons at NAL.

To do so we chose to look for decay modes of these heavy particles which would ultimately lead to particles of very high velocity. To separate these decay modes from radioactivity in our target we chose to use a gas Cherenkov counter as our basic detector, (using one that had been designed and used for previous experiments). By setting the pressure of the gas in the Cherenkov counter above the threshold for the highest energy electron to be expected from beta rays or from gamma rays resulting from the nuclear radioactivity in the target we hoped to operate without background in exceedingly high levels of radioactivity. It was our desire to avoid the use of scintillation counters as the basic detection device since we expected (as it turned out, correctly) that they would be swamped by the radioactive emissions from the target. New particles of multi-BeV masses decaying by $\pi^0$ or gamma ray emission would produce converted electrons of such high gamma that they would produce large pulses well above the Cherenkov counter threshold. Our apparatus would also be sensitive to particles decaying into charged pions with momenta $\gtrsim$ 1.5 Gev/c. Unfortunately, gamma rays from radioactive decays which struck the phototube envelopes or the quartz windows of the gas Cherenkov counter would produce converted electrons which in turn would produce Cherenkov light. To remove this source of background we employed six phototubes viewing the light from the same event to reduce the number of accidental coincidences due to gamma ray interactions directly with the quartz windows or phototubes to a negligible amount.

In order to reduce cosmic ray background considerably, we chose to take advantage of the directional property of our Cherenkov counter and of the directional characteristic of the cosmic ray flux. The inside of the entrance window of our gas Cherenkov counter was blackened. The Cherenkov counter was mounted vertically above the target aiming towards the earth, in this way using the earth as our cosmic ray shield. Our final trigger rate from cosmic ray background (using auxiliary scintillation counters described below) was one event in 10 days, compared to two per day with the Cherenkov counter in a horizontal position.

In our experiment, the protons passed through a primary target of length $\ell$ followed immediately by a secondary target of length L. The primary target served as a source for new particles and as material for slowing down particles which could come to rest in the secondary target. The secondary target was chosen of an appropriate size that matched the acceptance aperture of our Cherenkov counter. It also acted as the radiator to convert gamma rays produced by particle decays in the secondary target. The secondary target was removed from the accelerator beam line and carried to our apparatus.

The yield of new particles is proportional to the cross section for production, to the total number of protons incident on the target, and to the probability that a particle produced in the primary or secondary target is captured in the secondary target. Unfortunately, without a knowledge of the mass and

properties (strongly or weakly interacting, charged or uncharged, etc.) of the new particles, the capture process is obscure. Thus it is very difficult to extract a cross section or report an upper limit to a cross section. We shall include in this paper all the relevant parameters that can serve as the basis for such a calculation, but for display purposes we shall define a quantity $\sigma_{PC}$, which is an effective cross section for production and capture in our secondary target geometry. It is defined as the cross section that would be obtained if the particle was produced and captured in the target studied by the detection apparatus. Most particles slowing down by the usual ionization mechanism would escape our targets so that the capture probability would be small. In one well defined case, the production of magnetic monopoles, $\sigma_{PC}$ is in fact the true cross section since the highly ionizing monopoles would not escape the target. However, new types of particles might possess new interactions.

B. Pontecorvo[1] in his suggestion for searches for new stable particles was well aware of the capture problem and of the difficulty of stopping energetic particles in matter. He proposed the possibility that new particles produced in nuclear targets might have a finite probability of capture in the nuclei of the thin target, forming new kinds of hyper-nuclei. In 1971, a Dubna group[2] searched for new long lived particles produced in (2 cm) aluminum and aluminum plus tungsten internal targets of the Serpukhov accelerator by 70 BeV protons. Our experiment differed from theirs in three main respects. a) Since we used an extracted proton beam impinging on a thick aluminum target, there was a greater likelihood that particles made in the primary target would stop in the secondary target. b) We used considerably higher bombarding energy. c) We used a directional gas Cherenkov counter to achieve very low cosmic ray and accidental backgrounds.

## II. EXPERIMENTAL ARRANGEMENT

Figure 1 shows the experimental arrangement of our apparatus. The Cherenkov counter was mounted vertically above a lead shielded region in which the aluminum target could be deposited. Lead was placed below the area occupied by the quartz windows and the phototubes in order to attenuate gamma rays from the target.

Although our gas Cherenkov counter was our basic detecting device, we chose to add to the apparatus four scintillation counters. Two of the scintillation counters, denoted S3 and S4, were placed behind the lead shielding and above the phototubes. The particles from extensive air showers that might strike the phototubes or their quartz windows would pass through S3 and S4 and they could be used as an anticoincidence device to eliminate this source of cosmic ray background. Scintillation counters S1 and S2 were placed in coincidence and located at the exit of the gas Cherenkov counter. It was not clear at the outset of the experiment whether they would be able to be employed because there existed the possibility that they would be swamped with particles from the aluminum target. If they could be used, however, they would serve a number of useful functions. First, they would serve to better define the solid angle of the detector. Second, only particles passing through the Cherenkov counter making a line between the aluminum target and S1 and S2 could be considered a true event. While this would reduce the solid angle, it would also eliminate background pulses from cosmic rays entering in a lateral direction through the Cherenkov counter. Because the

Cherenkov counter had reflecting walls, even the sensitivity of the Cherenkov counter for off-axis rays was not inappreciable. It turned out in practice that the signal-to-noise ratio was improved by the addition of these scintillation counters, and that they could, in fact, be used in the levels of radioactivity in which we operated since the accidental rates in the gas Cherenkov counter were so low.

## III. THE CHERENKOV COUNTER

### a) Construction

The Cherenkov counter was housed in a cylinder which possessed a 300 lbs./in.$^2$ pressure rating. Within the pressure chamber was located an Alzak aluminum rectangle of dimensions 6" x 11.5" x 60". At the pressure at which this Cherenkov counter was operated, (250 lbs./in.$^2$, $CO_2$) Cherenkov light from an incident particle would reflect from the walls of the Alzak and eventually strike a pair of mirrors at the end of the Alzak rectangle at 45$^\circ$ to the axis of the Cherenkov counter. The Cherenkov counter was originally designed to be viewed by two 5" phototubes necessitating 3" thick quartz windows to provide the pressure seal for the chamber. Because of our concern over accidentals arising from $\gamma$ rays converting in the windows, we redesigned the counter to be viewed by two clusters of three 2" phototubes (56DVP's). These tubes viewed the Cherenkov light through optically separate quartz windows of only $1\frac{1}{8}$ cm. thickness. This not only reduced the volume of the quartz considerably (a factor of 15) but also enabled us to require up to a

six-fold coincidence. The entrance window of the Cherenkov counter was a one quarter inch thick aluminum curved section. This and the aluminum of the target itself comprised the material serving to convert photons.

b) Calibration

The calibration was performed with cosmic rays but with the counter facing away from the earth, opposite to the arrangement shown in Figure 1, in order to get appreciable rates for calibration. Scintillation counters were placed above and below the entrance and exit windows of the Cherenkov counter and served to require the cosmic rays to pass roughly along the axis of the Cherenkov counter. In addition the particles were required to pass through thirty two inches of iron in order to ensure that muons having a gamma greater than twelve were used in the calibration. The Cherenkov counter was run at 250 pounds pressure of $CO_2$ which provided a gamma threshold of 8.3.

Each phototube was typically 85 to 90% efficient, resulting in a six-fold coincidence efficiency of 49%. Requiring any two out of three tubes on one side (K1) in coincidence with any two out of three on the other side (K2) resulted in an 80% efficiency. This latter requirement, which was used as our basic trigger, will henceforth be referred to as "fourfolds". The sum of the pulse heights of all six phototubes was recorded and is shown in Figure 2. The smooth curve peaking at a relative pulse height of about 62 is the calibration curve for cosmic rays filtered by iron. This curve represents what pulse height distribution is to be expected from decays of massive particles. Typical "target out"

background in our geometry is also shown in Figure 2. At a relative pulse height of 40, which was the arbitrary cutoff we employed, very few cosmic rays in our experimental geometry, would simulate a true ($\gamma > 8.3$) event. This curve represents the crude curve obtained without use of the scintillation counters.

To take advantage of the excellent time definition of Cherenkov radiation, the relative time of K1 and K2 was recorded. The full width at half maximum obtained from the calibration run was 2.2 ns.

## IV. ELECTRONIC LOGIC

Each phototube was connected to a discriminator that had the feature of allowing the input pulse to be taken out again with only a 15% loss in pulse height. This analogue pulse went to an ADC which recorded its pulse height. The discriminator outputs of the three phototubes on each side of the Cherenkov counter were sent to a two out of three majority coincidence circuit, (K1 and K2). A K1-K2 coincidence defined an event. This event pulse was fanned out and was used to:

a. Gate the ADC's

b. Gate on a circuit which measures the relative timing of K1 and K2.

c. Start a read out system[3] which records the event on an incremental tape recorder.

The data recorded on tape were:

a. Individual pulse heights of the six phototubes viewing the Cherenkov counter.

b. Pulse heights of all four scintillation counters.

c. Relative timing of K1 and K2.

d. Absolute time of the event obtained from a 5 Mc oscillator feeding a 48 bit scaler.

## V. EXPERIMENTAL PROCEDURE

The target used in our experiment has a cross sectional area 6" x 4" and was 4" long (along the beam direction). It was placed just downstream of the primary target which had the same cross-section but was 12" long. The beam intensity was monitored at the control room using a secondary emission monitor in the extracted beam line. The targets were located at the nu-hall site at NAL.

When the accelerator shut down, the target was manually removed and transported a distance of two miles to the building housing the experimental apparatus. (It is this procedure that precludes the detection of particles with a half-life of less than approximately one hour with production cross sections, $\sigma_{PC} \cong 10^{-36}$ cm.$^2$). The target data and detection times are listed in Table I.

The 300 GeV results are presented in two ways: with the Cherenkov counter alone, and with the scintillation counters added to the Cherenkov trigger. The reason for this is that the scintillation counters were not operational for 14.4 hours after the aluminum target was placed under the Cherenkov counter. Thus

the 300 GeV data is presented over a 26 hour interval without the scintillators and over a 12.7 hour interval when the scintillation counters were used.

When first removed from the accelerator, the radioactivity measured at the surface of the target, bombarded at 400 BeV, was 20 r/hr. With the target in place in our apparatus, the singles rates of the Cherenkov phototubes were 2.5K per second, making the calculated fourfold accidental rate of < .1/year negligible compared to the fourfold trigger rate of two per hour. The single rates in S1 and S2 were 250 K per second. Their measured coincidence rate was 2.6K per second, while their computed accidental rate was 1K per second. The singles rates for S3 and S4 were only 7.0K per second, since these counters were shielded from direct rays from the target with lead, as shown in Figure 1. All singles rates dropped by a factor of approximately two after thirteen hours, which agrees with our surmise that the largest source of radioactivity would be $Na^{24}$.

## VI. ANALYSIS

### a) Cuts

The following cuts are applied to the raw data.

1. Timing (T) cut: the relative time of K1 and K2 is required to be within $\pm$ 4.5 ns of the central value. Figure 3 shows this time distribution for the calibration and for the target out (background) runs. With this wide cut no loss in events is expected. Had there been measurable chance background, one could have used $\pm$ 1 ns and reduced the accidental rate relative to the true events.

2. Pulse height (P) cut: the sum of the pulse heights of the six phototubes is required to be greater than forty pulse height units. Figure 2 shows this distribution for the calibration, target in, and target out runs with the T cut applied. Histograms for the 300 and 400 BeV and the target out runs are almost identical and have entirely different shapes than the calibration runs taken with high energy cosmic rays.
3. Scintillation counter (S) cut: the scintillation counters S1 and S2 were both required to have a pulse height of at least that of minimum ionizing particles. S3 and S4 were each used as anti-coincidence counters. The event was rejected if a pulse height greater than one fifth minimum ionizing was recorded in either S3 or S4.

b) Background

Three background runs were taken, one at the University of Pennsylvania, and two at NAL. These are summarized in Table II. The time distribution of the 157 hour run at NAL is shown in Figure 4 for both "fourfolds" and "six-folds", with the T cut applied but without the P and S cuts.

c) Target In

Table III lists the results of the 300 GeV and 400 GeV runs. No events were observed when a sixfold coincidence was demanded along with the S, T, and P cuts. The pulse height distributions are shown in Figure 2 with a T cut but no S cut applied. The absolute time distribution is shown in Figure 5 for the fourfolds when the T cut is applied.

d) Efficiency

The number of particles produced by proton-nucleon interactions and stopping in our secondary target is given by:

$$N = N_A \rho \sigma_{PC} \, L r_p \, \tau \, [1 - e^{-(T_f - T_i)/\tau}] \qquad (1)$$

where $\sigma_{PC}$ is the effective cross section discussed in the introduction, $r_p$ is the proton rate, L is the length of the target (in this case the 4" length of the secondary target), $\tau$ is the mean life, and $T_f$ and $T_i$ are the final and initial times of irradiation. Since the beam was on and off intermittently with varying intensities, the above formula was applied to each interval during which the beam intensity was constant, using the targeting histories supplied by the control room. The number of decays that would be observed is given by

$$N_D = N[e^{-T_2/\tau} - e^{-T_1/\tau}] \, \varepsilon_c (\Omega/4\pi). \qquad (2)$$

$T_2$ and $T_1$ are the final and initial detection times, $\Omega/4\pi$ is the fractional solid angle defined by the position of the scintillators S1 and S2 (6" x 11.5") located a distance of 8' from the target and yielding a fractional solid angle of $6 \times 10^{-4}$. $\varepsilon_c$ is the detection efficiency of the Cherenkov counter for a particle with $\gamma \geq 12$. ($\varepsilon_c$ = .49 for a six-fold coincidence requirement.)

There remains the question of the nature and number of the daughter particles; e.g., if the parent particle were to decay

only via $\pi^0$'s, we would have to multiply $N_D$ by the probability that at least one gamma ray converts. (~60% for a single $\pi^0$ decaying at the center of the secondary target). For purposes of our crude estimate, we will take this number to be unity. The relative efficiencies for the 300 GeV and 400 GeV runs are shown in Figure 6.

e) Results

The best upper limit for $\sigma_{PC}$ is obtained by requiring a six-fold coincidence and applying all three cuts (S, T, and P). Table IV lists these upper limits at the two standard deviation level for various mean lives. Their relative efficiency curves, depicted in Figures 6 and 7, can be used to determine cross sections for other mean lives.

f) Conclusions

We have found no evidence for new massive long lived particles having half-lives between roughly one and one thousand hours produced by the irradiation of an aluminum target with protons of energies 300 and 400 Bev. Upper limits to the "cross section" for production and capture are in the micro-microbarn region ($10^{-36}cm^2$). This upper limit is a true cross section for the production of unstable monopoles. (We note that the detection of unstable monopoles requires neither the extraction of magnetic monopoles from materials, nor the need to separate monopoles from antimonopoles, which are requirements in other types of searches.[4][5]

The detector we have described is unusually free of background in the presence of both highly radioactive sources and cosmic ray background, having detected only one count in a 10 day running period.

## References


1. B. Pontecorvo, Sov. J. Nucl. Phys. 11, 473 (1970).

2. A. V. Dem'Yanov, A. V. Kulikov, A. V. Kuptsov, G. G. Mkrtchyan, L. L. Nemenov, B. M. Pontecorvo, G. I. Smirnov, D. M. Khazins, and Yu. M. Chirkin, Sov. J. Nucl. Phys. 13, 447 (1971).

3. T. J. Droege, Princeton-Pennsylvania Accelerator Report No. PPAD-605E, 1966 (unpublished).

4. R. A. Carrigan, F. A. Nezrick, Phys. Rev. D3, 56 (1971).

5. P. H. Eberhard, R. R. Ross, L. W. Alvarez, R. D. Watt, Phys. Rev. D4, 3260 (1971).

## Figure Captions

1. Experimental Arrangement. (S1-S4 are scintillation counters of dimensions 6" x 11 1/2" x 1/2".)
2. Pulse height spectra, summed over the six phototubes viewing the Cherenkov counter. (The trigger requirement for each was the four-fold coincidence defined in the text, with the T cut applied.)
3. Relative timing between the two clusters of phototubes viewing the Cherenkov counter.
4. Time distribution of events for the cosmic ray background run. (The trigger requirement for each was the four-fold coincidence defined in the test, with the T cut applied.)
5. Time distribution of events for the 300 GeV and 400 Gev runs. (The trigger requirement for each was the four-fold coincidence defined in the text, with the T cut applied.)
6. Relative detection efficiency as a function of mean life for the 300 GeV and 400 GeV runs.

TABLE I IRRADIATION PARAMETERS

| | 300 GeV (Using Scintillation Counters) | 300 GeV (Not Using Scintillation Counters) | 400 GeV (Using Scintillation Counters) |
|---|---|---|---|
| $T_1$ (Interval Between Beam On and Target Removal) | 28 hrs. | 28 hrs. | 246 hrs. |
| $T_2$ (Interval Between Beam Off and Data Taking) | 20.4 hrs. | 6.0 hrs. | 0.8 hrs. |
| $T_3$ (Beam on Interval) | 26.8 hrs. | 26.8 hrs. | 107.3 hrs. |
| $T_4$ (Data Taking Interval) | 12.7 hrs. | 25.6 hrs. | 34.5 hrs. |
| Total Protons on Target | $2 \times 10^{16}$ | $2 \times 10^{16}$ | $4 \times 10^{16}$ |

TABLE II

Background Rates (Counts/hr.)

| Location | Date | Time Int. | 4 Fold T Cut | 6 Fold T Cut | 6 Fold S,T,P Cut |
|---|---|---|---|---|---|
| Univ. of Penn | 3/26/73 | 84 hrs. | 2.04 ± .16 | .32 ± .06 | _____ |
| NAL | 4/9/73 | 157 hrs. | 1.90 ± .11 | .22 ± .04 | .006 ± .006 (1 event) |
| NAL | 4/29/73 | 21.3 hrs. | 2.58 ± .35 | .61 ± .17 | 0 |
| All Three | | 262.3 hrs. | 1.97 ± .09 | .27 ± .03 | .004 ± .004 (1 event) |

TABLE III OBSERVED RATES WITH

VARIOUS APPLIED CUTS

| | 300 GeV (No Scint.) | 300 GeV (with Scint.) | 400 GeV (with Scint.) |
|---|---|---|---|
| 4 Fold T Cut | 69/25.6 hrs. | 33/12.75 hrs. | 79/34.5 hrs. |
| 6 Fold T Cut | 11/25.6 hrs. | 4/12.75 hrs. | 13/34.5 hrs. |
| 6 Fold S,T,P Cuts | ------- | 0/12.75 hrs. | 0/34.5 hrs. |

TABLE IV

Upper limit to $\sigma_{PC}$ in Units of $10^{-36}$ $cm^2$, as a Function of Mean Life

| LIFETIME | 300 GeV | 400 GeV |
|---|---|---|
| 1 | ------- | 2.5 |
| 5 | 8.7 | .32 |
| 10 | .71 | .19 |
| 30 | .19 | .12 |
| 50 | .18 | .10 |
| 100 | .24 | .09 |
| 500 | .87 | .19 |
| 1000 | 1.7 | .33 |

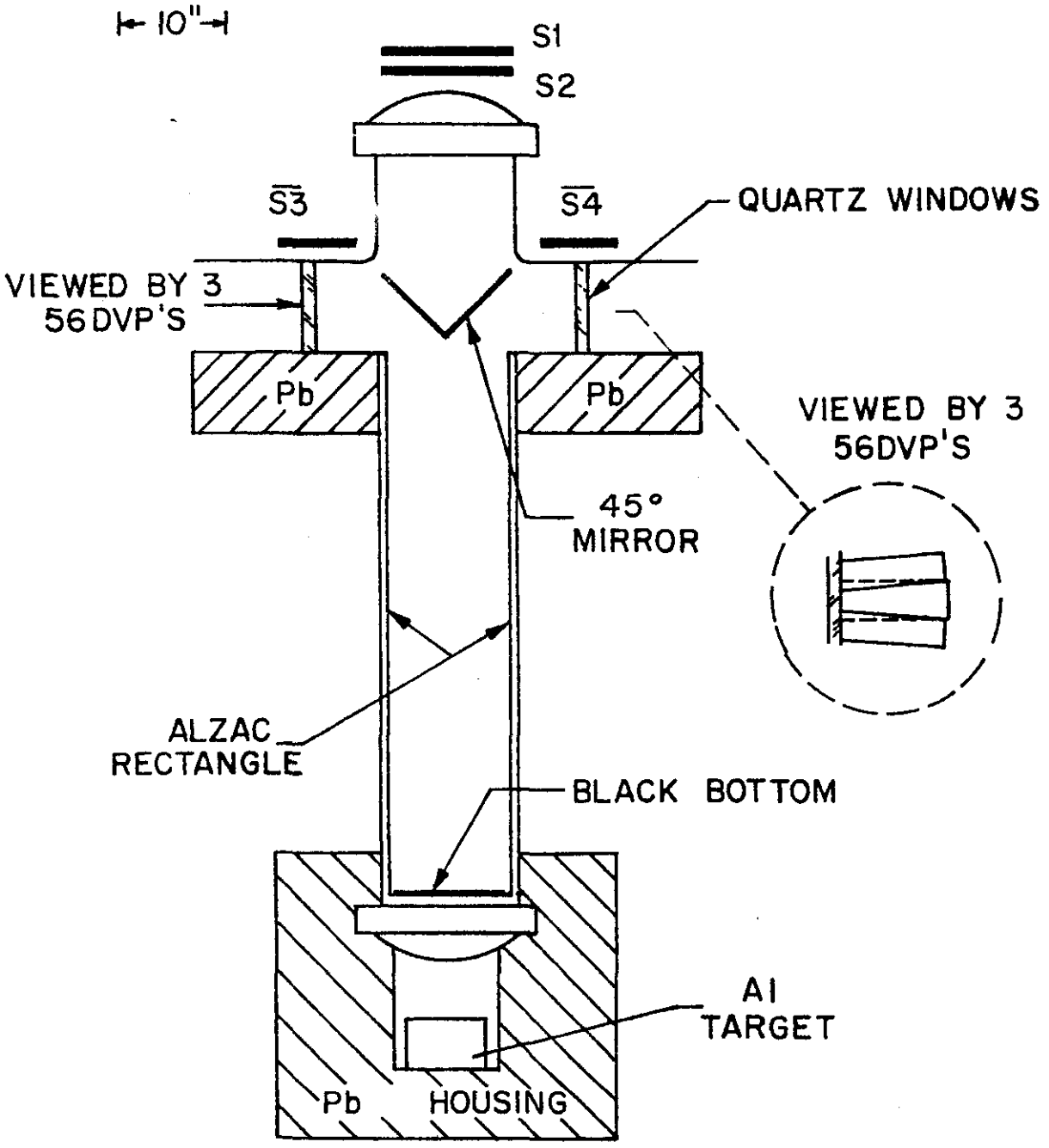
10"
S1
S2
$\overline{S3}$
$\overline{S4}$
QUARTZ WINDOWS
VIEWED BY 3
56DVP'S
Pb
Pb
VIEWED BY 3
56DVP'S
45°
MIRROR
ALZAC
RECTANGLE
BLACK BOTTOM
Al
TARGET
Pb
HOUSING

Fig. 1

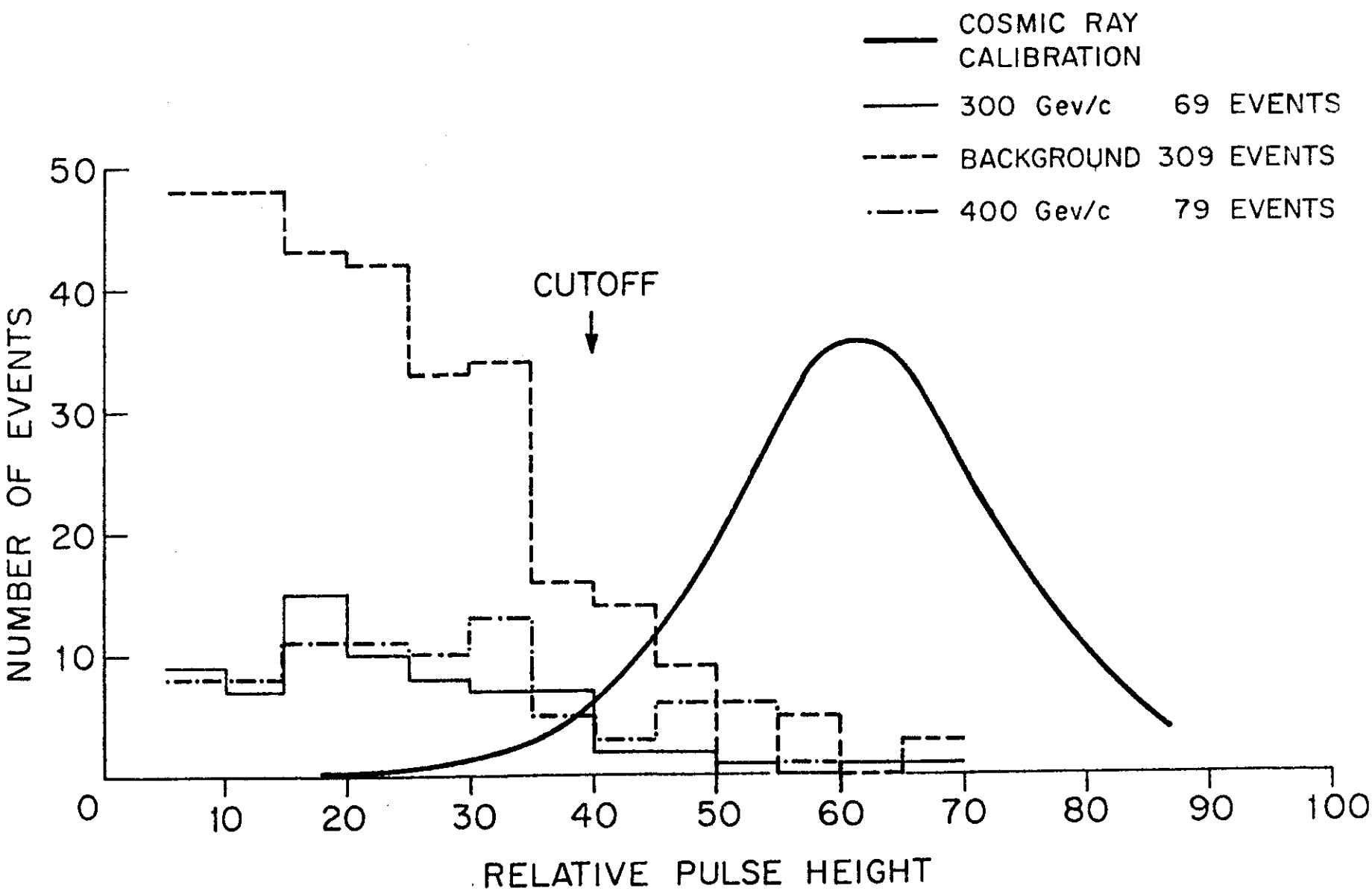
COSMIC RAY CALIBRATION
300 Gev/c 69 EVENTS
BACKGROUND 309 EVENTS
400 Gev/c 79 EVENTS
CUTOFF
NUMBER OF EVENTS
50
40
30
20
10
0
10
20
30
40
50
60
70
80
90
100
RELATIVE PULSE HEIGHT

Fig. 2

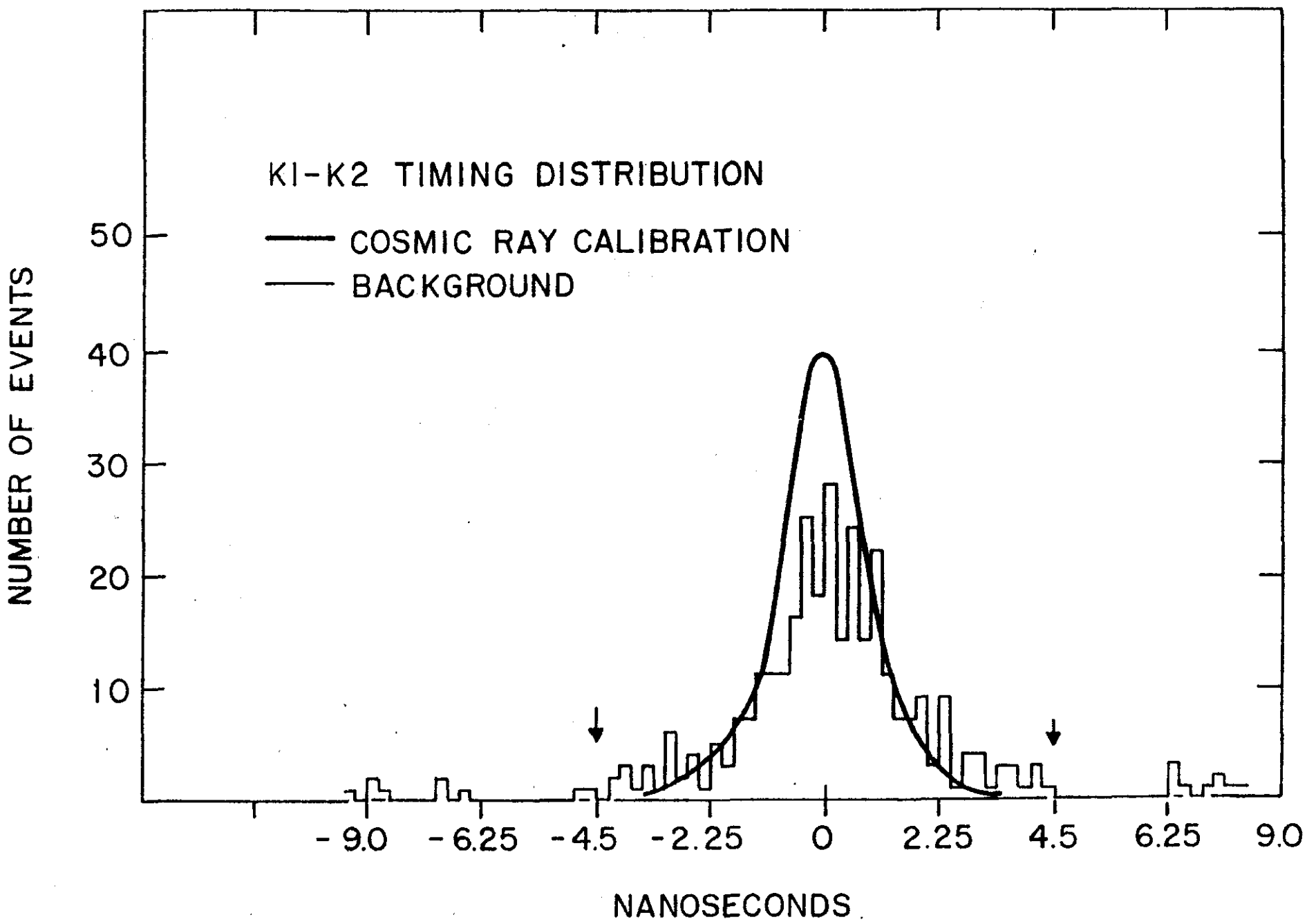
K1-K2 TIMING DISTRIBUTION
COSMIC RAY CALIBRATION
BACKGROUND
NUMBER OF EVENTS
50
40
30
20
10
-9.0
-6.25
-4.5
-2.25
0
2.25
4.5
6.25
9.0
NANOSECONDS

Fig. 3

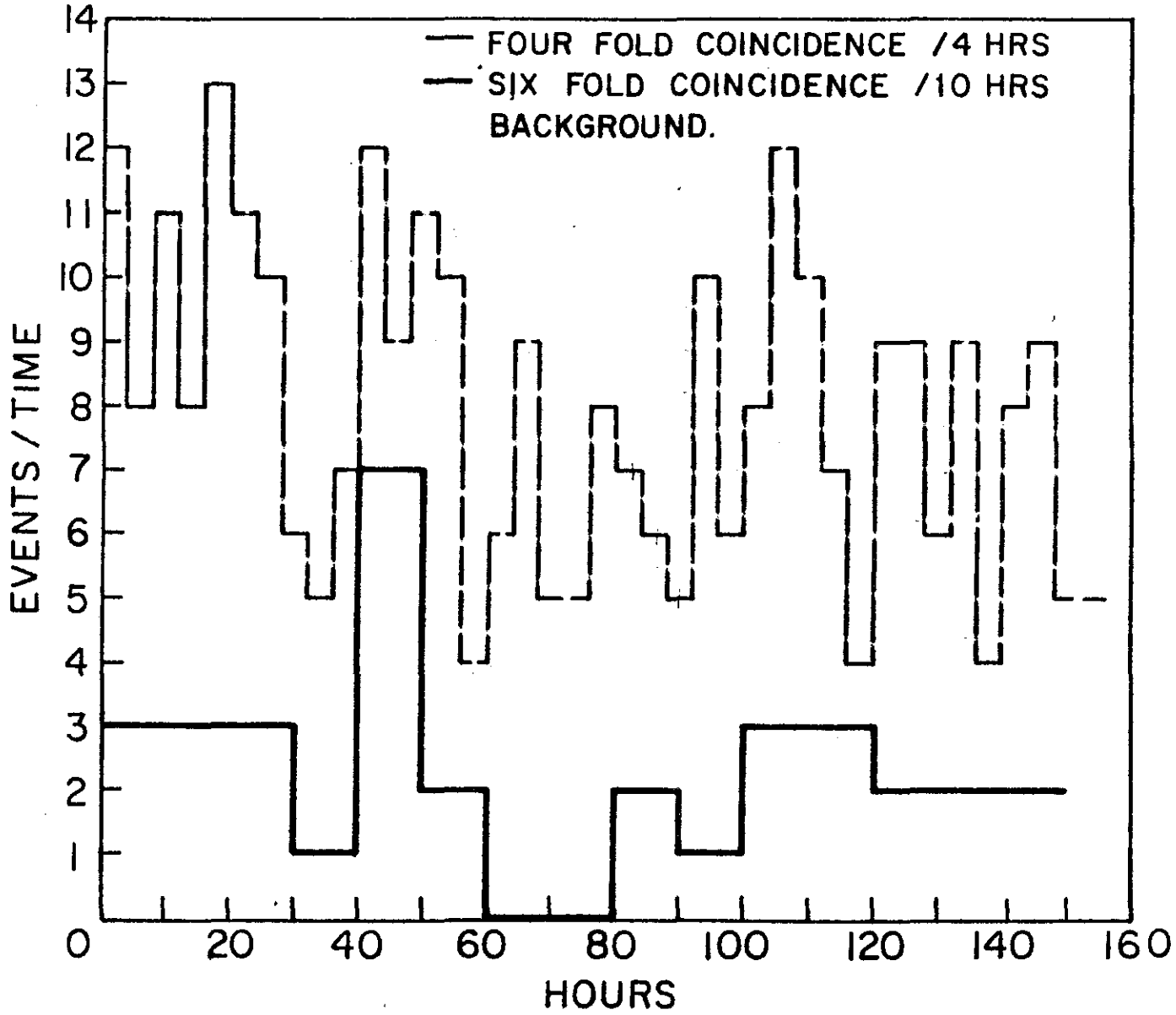
FOUR FOLD COINCIDENCE /4 HRS
SIX FOLD COINCIDENCE /10 HRS
BACKGROUND.
EVENTS / TIME
HOURS
0
1
2
3
4
5
6
7
8
9
10
11
12
13
14
20
40
60
80
100
120
140
160

Fig. 4

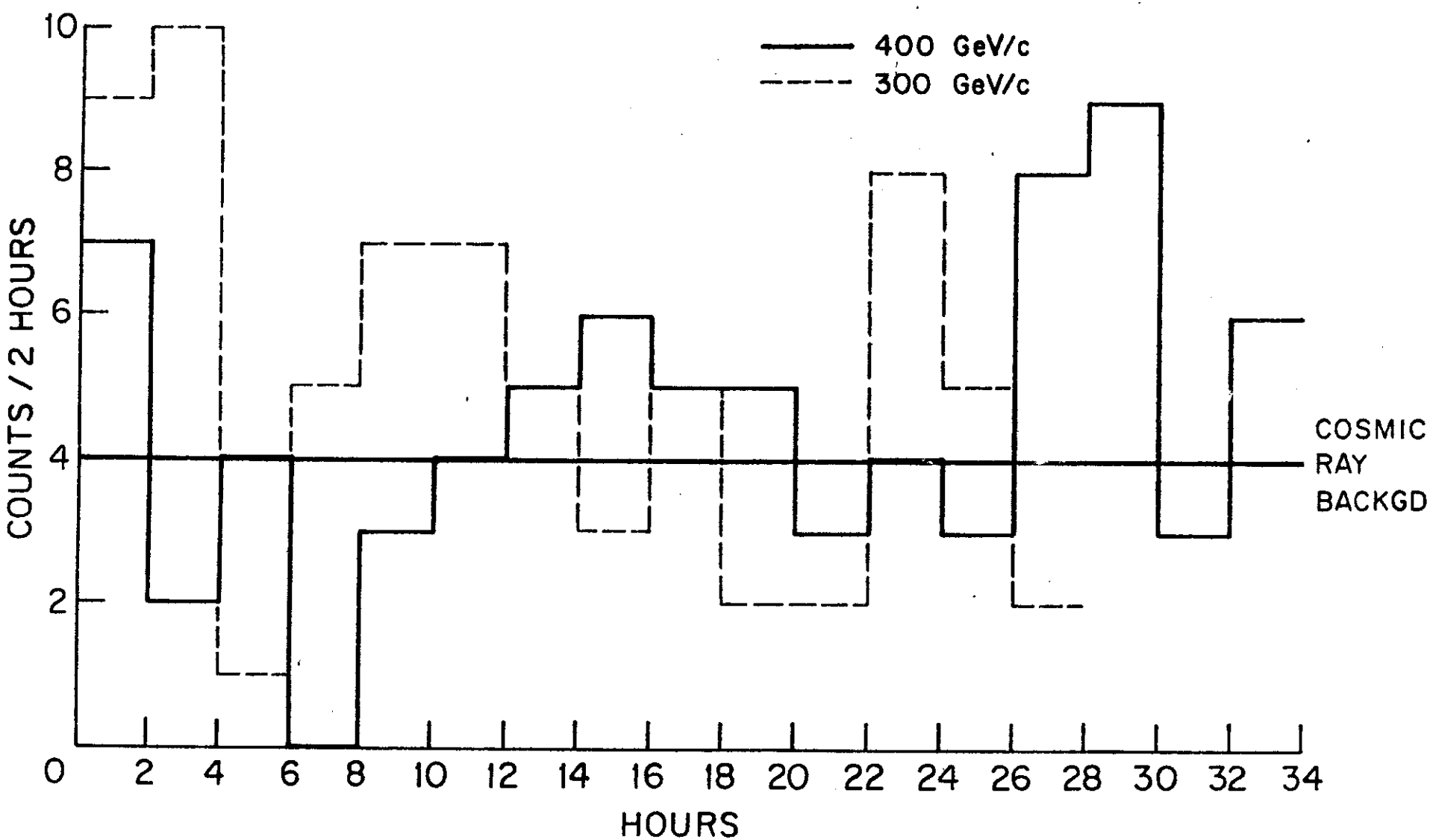
400 GeV/c
300 GeV/c
COSMIC
RAY
BACKGD
COUNTS / 2 HOURS
HOURS
0
2
4
6
8
10
12
14
16
18
20
22
24
26
28
30
32
34

Fig. 5

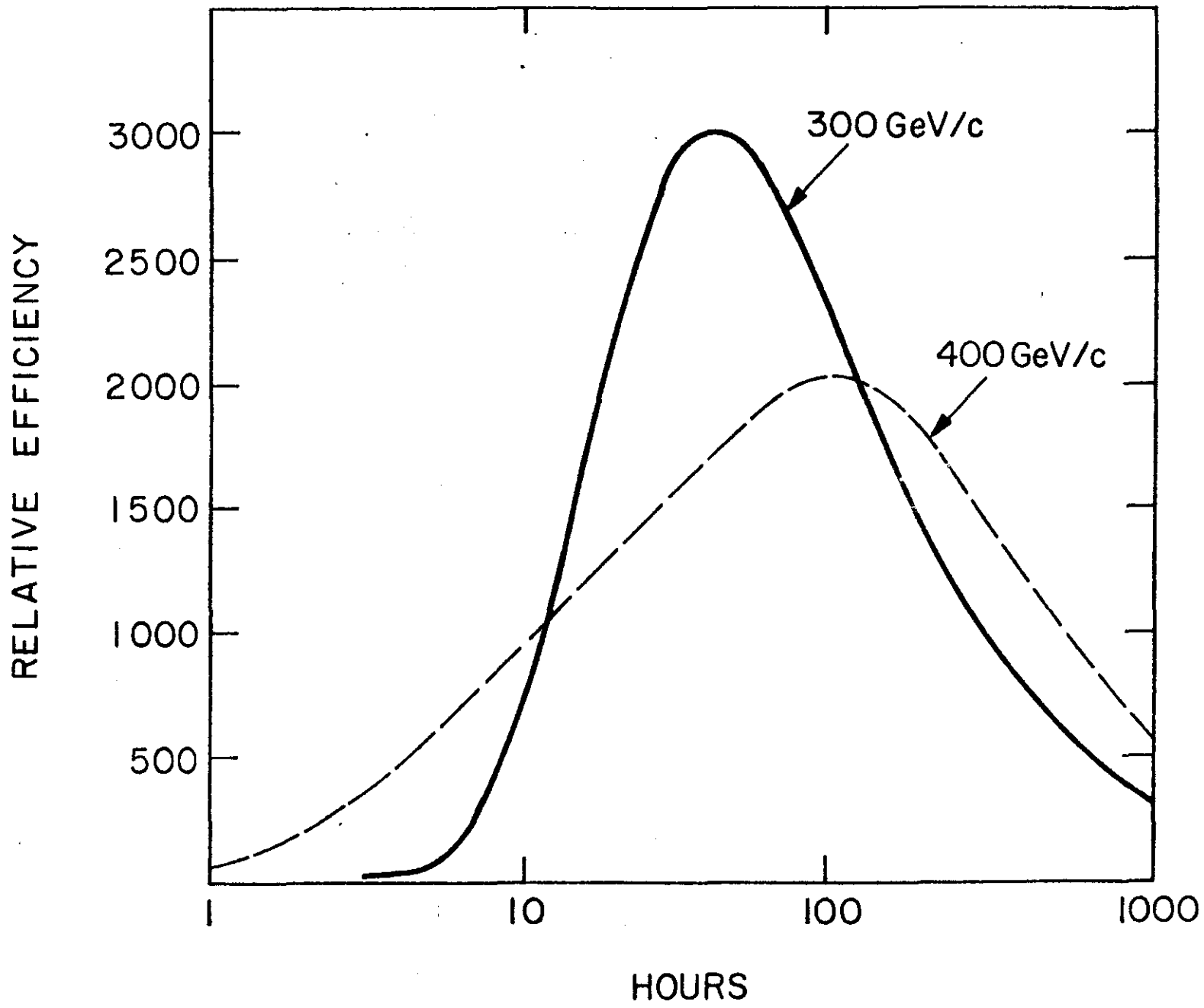
300 GeV/c
400 GeV/c
RELATIVE EFFICIENCY
3000
2500
2000
1500
1000
500
1
10
100
1000
HOURS

Fig. 6