#36 Dupl

national accelerator laboratory

#36

PUB-73-110-E

C 0036

Cryopumped Hydrogen Jet Target

V. Bartenev, A. Kuznetsov, B. Morozov, V. Nikitin, Y. Pilipenko, V. Popov, L. Zolin, Institute of High Energy Physics, Serpukhov, U.S.S.R.; B. Strauss, J. Klen, E. Malamud, D. Sutter, National Accelerator Laboratory, Batavia, Illinois

Introduction

In order to carry out proton-proton interaction experiments with the internal circulating beam of the NAL main accelerator, a jet target was designed. This jet is required so that the high backgrounds inherent with polymer foil targets are eliminated. This target produces a pulsed jet of condensed hydrogen with the following parameters: diameter, ~ 10 mm; duration, 300 msec; density, $\sim 10^{-6}$ g/cm^3 [1-5]. The jet is pumped from the vacuum chamber with a helium-cooled cryopump. The target has been in operation for a year and has serviced five experiments including the first USSR/USA high energy physics collaboration.

Target Description

A schematic of the target is shown in Fig. 1. Boiloff helium is used to cool the main heat exchanger (3). When this is done, a measured amount of compressed hydrogen, which has been gathered in the buffer volume between valves 1 and 2, is released into the heat exchanger train. Here it is cooled, condensed, and injected into the target. Injection is perpendicular to the proton beam of the accelerator. The jet crosses the accelerator chamber at the beam line and is captured by the helium-cooled cryopump. This cryopump has two portions: a main trap with a round throat of 19.6 cm^2 and an additional trap with a throat of 36.6 cm^2. The additional trap helps to scavenge gas which has diffused into the chamber during injection. The target is periodically withdrawn from the accelerator chamber (11) to an isolation chamber (8) where it is defrosted, and where the solid hydrogen clustered in the traps is sublimated.

Because of working conditions, such as high radiation levels in the accelerator tunnel, the target must be operated remotely. Through remote

control panels, operators can shift the target in a vertical direction, as well as open and close vacuum gates and carry out all cryogenic operations, such as cooling and filling with liquid helium. All main parameters are registered on recorders and a computer interface is provided.

Precooling and Hydrogen Condensation

A "see-saw" heat exchanger is used to cool the hydrogen in the jet. Basically it consists of two capillaries attached along their length. The heat exchanger is first cooled by a measured amount of boiloff gas from the liquid helium cooling the cryopump. When this flow is stopped, a pre-measured amount of ℓN_2 cooled hydrogen is bled into the other side of the heat exchanger where the sensible heat of the copper cools the gas to the region of 20K and delivers it to the jet nozzle. The timing of these gas pulses is controlled by a special timing circuit which is triggered with respect to cycles in the main accelerator. Thus we do not have a standard heat exchanger but rather a short term sensible heat storage device.

Jet Collimation

In order to minimize the local vacuum deterioration in the accelerator, the divergence of the hydrogen jet must be minimized. This is done with a series of collimators. These are scrapers with small cryopumps at their side. Even with this, there is a large local variation of vacuum in the vicinity of the jet as shown in Fig. 2. Oil diffusion pumps are used in a scavenger system for 10 meters up and downstream of the jet.

To protect synchrotron operation from the effects of excessive local vacuum pressure rise due to the hydrogen jet, two predetermined pressure and safety levels are continuously monitored. One is on overall pressure rise. If the local vacuum pressure rises above this level, then jet operation is electronically vetoed until recovery occurs. The second safety level applied to multiple jet operation during one synchrotron acceleration cycle. Here the vacuum pressure rise associated with each jet firing must recover below the safety level before the next jet or that jet will be electronically vetoed. In this

way the average vacuum near the jet can be maintained on the average at a quality good enough to cause only minimal interference with the circulating proton beam.

Helium Supply System

The system for providing liquid helium to the target is based around a CTi Model 1400 liquefier. This machine makes liquid continuously into a 1000 liter dewar. This liquid is then batch transferred to a 500 liter dewar near the target in the accelerator tunnel. The transfer line which is 35 m long and nitrogen shielded has a steady state loss of about 10 watts. This figure includes six bayonets. A remotely controlled transfer liquid in small batches from the downstairs dewar to the target itself. The Model 1400 liquefier is also used for recovery of the boiloff helium gas. The boiloff line from the target is connected to the suction of the compressor system. Upon a rise in suction pressure, the system can shunt the full output of the compressors to the recovery tank. The system has recently been brought up to a capacity of 30 ℓ/hour by the addition of a third compressor.

Acknowledgements

The authors would like to thank the many people who contributed to this paper; in particular, A. Belushkina, A. Valevich, V. Smelanski, and others of the staff of the Cryogenic Laboratory at the Joint Institute for Nuclear Research, Dubna, USSR, who did the early development work on this apparatus. They would also like to thank the following at NAL: the Internal Target technicians and mechanical design group, and the NAL machine shop.

References

1. V. Bartenev, A. Valevich, Yu. Pilipenko, and V. Smelanski, JINR Preprint P13-6058, Dubna (1971).
2. K. D. Tolstov, JINR Reprint, 1698, Dubna (1964).
3. K. D. Tolstov, JINR Preprint, 1-4103, Dubna (1968).
4. V. Bartenev, et al, JINR Preprint, P13-6323, Dubna (1972).
5. V. Bartenev, et al, "Cryopumped, Condensed Hydrogen Jet Target for the NAL Main Accelerator," Advances in Cryogenic Engineering, Vol. 18 (1973).

Figure Captions

Figure 1: Cross section of the target for the production of a condensed hydrogen jet (dimensions are in mm). Legend: (1, 2) supply hydrogen valves; (3) heat exchanger; (4) nozzle and collimator system; (5) upper cryogenic pump; (6) lower cryogenic pump; (7) shield cooled by vapor helium; (8) target isolation chamber; (9) pressure gauge; (10) heat-exchanger control valve; (11) accelerator chamber; (12) vacuum gate; and (13) valve for evacuation of sublimated hydrogen.

Figure 2: Pressure variation in the accelerator vacuum chamber during injection of the jet. The base pressure is 2.4×10^{-6} Torr. The first peak shows the pressure rise in the vacuum chamber neat the jet. The peak pressure is 1.5×10^{-3} Torr and each major time division is equal to 500 msec. The second peak shows the vacuum change 10 m upstream of the jet. Peak pressure is 3.9×10^{-5} Torr. The delay is due to diffusion through the proton beam tube. Notice the rapid pumping speed of the cryopump as evidenced by the recovery leg of the first peak.

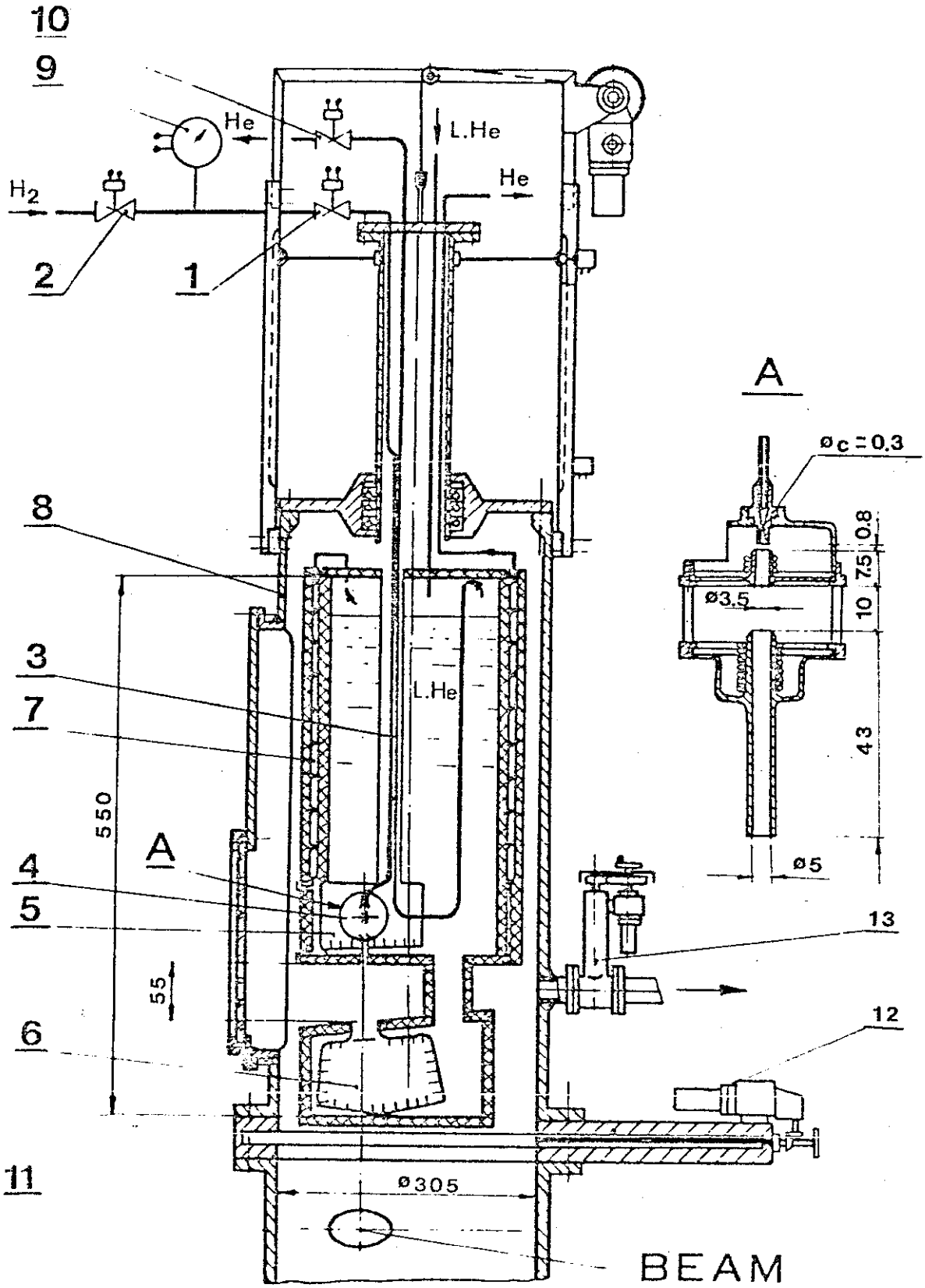
10
9
He
L.He
He
H_2
2
1
A
ø c = 0.3
8
0.8
7.5
10
ø3.5
3
L.He
7
43
550
A
ø5
4
5
13
55
12
6
11
ø305
BEAM
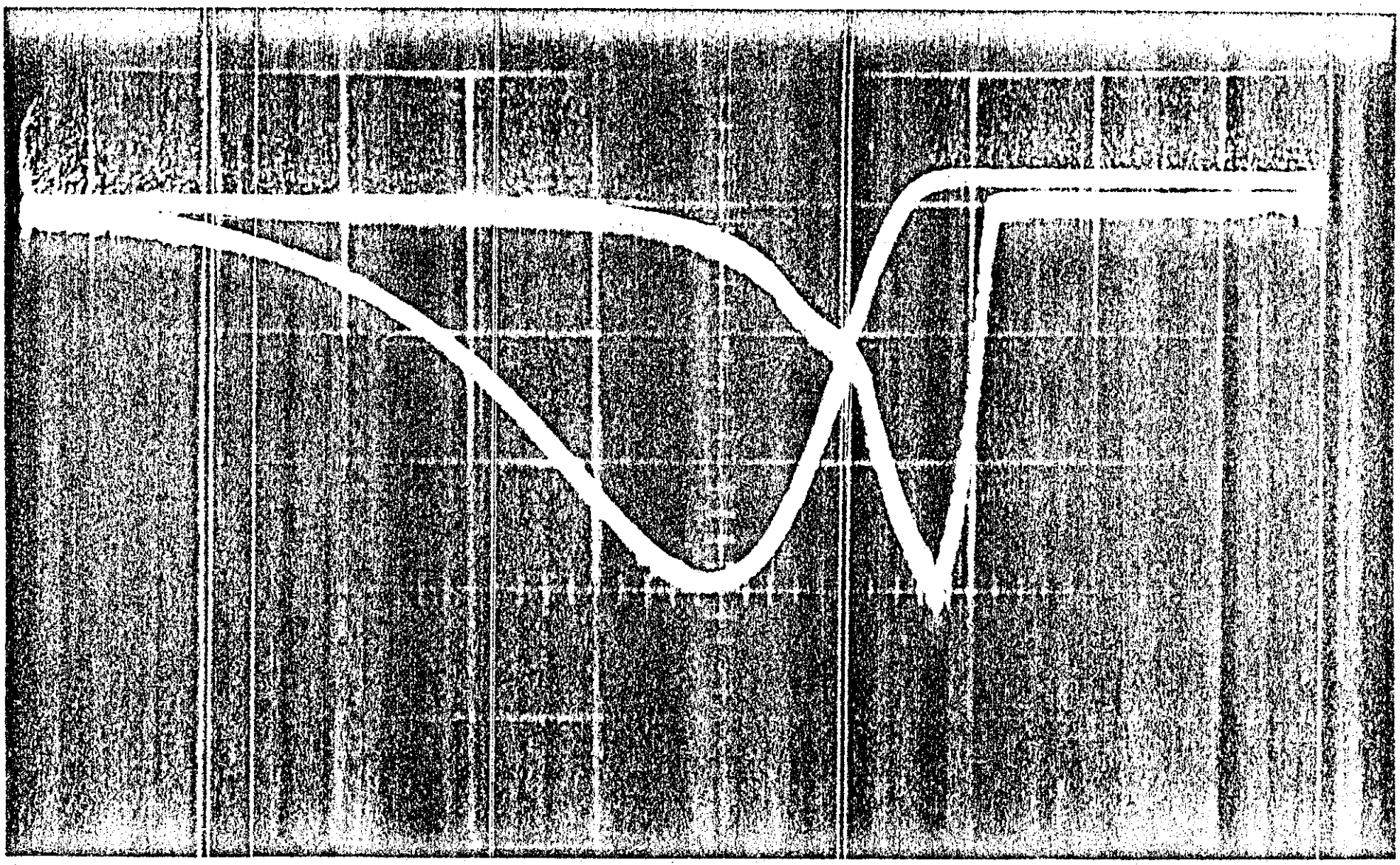
Figure 1